THE EFFECT OF INFORMATION ACQUISITION AUTOMATION AND WORKSPACE DESIGN ON HUMAN PATTERN RECOGNITION FOR INFORMATION FUSION

DISSERTATION

Kellie L. Turner, Civilian, USAF

AFIT-ENV-DS-21-D-062

DEPARTMENT OF THE AIR FORCE
AIR UNIVERSITY

AIR FORCE INSTITUTE OF TECHNOLOGY

Wright-Patterson Air Force Base, Ohio

DISTRIBUTION STATEMENT A.
APPROVED FOR PUBLIC RELEASE; DISTRIBUTION UNLIMITED.

AFIT-ENV-DS-21-D-062

The views expressed in this prospectus are those of the author and do not reflect the official policy or position of the United States Air Force, Department of Defense, or the United States Government. This material is declared a work of the U.S. Government and is not subject to copyright protection in the United States.

AFIT-ENV-DS-21-D-062

THE EFFECT OF INFORMATION ACQUISITION AUTOMATION AND WORKSPACE DESIGN ON HUMAN PATTERN RECOGNITION FOR INFORMATION FUSION

DISSERTATION

Presented to the Faculty

Department of Systems Engineering and Management

Graduate School of Engineering and Management

Air Force Institute of Technology

Air University

Air Education and Training Command

In Partial Fulfillment of the Requirements for the

Degree of Doctor of Philosophy

Kellie L. Turner, BA, MS

Civilian, USAF

November 2021

DISTRIBUTION STATEMENT A.
APPROVED FOR PUBLIC RELEASE; DISTRIBUTION UNLIMITED.

AFIT-ENV-DS-21-D-062

THE EFFECT OF INFORMATION ACQUISITION AUTOMATION AND WORKSPACE DESIGN ON HUMAN PATTERN RECOGNITION FOR INFORMATION FUSION

Kellie L. Turner, BA, MS

Civilian, USAF

Committee Membership:

Dr. Michael E. Miller
Chair

Dr. Robert Patterson
Member

Dr. Mark Oxley
Member

Lt Col Christina Rusnock, PhD
Member

ADEDEJI B. BADIRU, PhD
Dean, Graduate School of Engineering and Management

Abstract

Automation employed in information fusion systems is designed to help humans combine information derived from multiple sources to form a cohesive assessment of the situation. Research using the Levels of Automation model (Parasuraman, Wickens, and Sheridan, 2000) have produced conflicting results, which Patterson (2017) posited was because it focused solely on analytical processing while neglecting the effects of intuitive cognition. The present study examined how information acquisition automation affects the human's ability to detect patterns in data needed to reach higher levels of information fusion. Results showed that when information acquisition was performed through manual operations, pattern recognition performance was similar for both perceptual and symbolic tasks. However, when information acquisition was automated, pattern recognition was better for the perceptual task than for the symbolic task. The results of this research can inform guidelines for the design of common workspaces to support human-machine teaming in future information fusion systems.

Acknowledgments

I would like to express my sincere appreciation to my faculty advisor, Dr. Michael Miller, and my mentor and committee member Dr. Robert Patterson for their guidance and support throughout the course of this dissertation effort. Their insight, experience, and enthusiasm for this research was greatly appreciated. I would also like to sincerely thank all participants who volunteered their time for my in-person studies during the pandemic. Without them, I could not have finished. This work is dedicated in memory of my mom and to everyone who has suffered because of COVID-19.

Kellie L. Turner

Table of Contents

Page

Abstract i
Acknowledgments ii
Table of Contents iii
List of Figures v
List of Tables vi
I. Introduction 1
Background 1
Conceptual Framework 5
Problem Statement 7
Purpose Statement 9
Significance of the Study 9
Research Questions/Hypotheses 10
Organization of the Study 11
II. Literature Review 13
Chapter Overview 13
Information Fusion 13
Human Cognition 18
Human-Machine Teaming 28
Levels of Fusion and the Parasuraman et al. Processing Stage 40
Summary 41
III. Methodology 46

Chapter Overview....46
General Methodology....46
Pilot Study....52
Experiment 1....53
Experiment 2....55
Summary....56
IV. Analysis and Results....57
Chapter Overview....57
Experiment 1....57
Experiment 2....60
Investigative Questions Answered....66
Summary....67
IV. Conclusions and Recommendations....69
Chapter Overview....69
Conclusions of Research....69
Significance of Research....71
Recommendations for Action....71
Recommendations for Future Research....73
Summary....74
Appendix A: Instructions to Participants....76
Appendix B: Rational-Experiential Inventory-40....78
Appendix C: Demographic Questionnaire....80
Bibliography....81

List of Figures

Page

Figure 1. Information Fusion System as a Human-Machine Team (adapted from Turner & Miller, 2017).. 4

Figure 2. Finite State Algorithm used to generate routes.. 48

Figure 3. Perceptual/Procedural Task..... 50

Figure 4. Symbolic Task..... 51

Figure 5. Scrambled Maps..... 54

Figure 6. Label-Based Grammar 55

Figure 7. Foils Grammars used for Experiments 1 and 2. 59

Figure 8: Means and Standard Errors Plot of Accuracy by Task Type and Information Acquisition.. 62

Figure 9. Scatter Plot of Mean Experientiality Scores and Accuracy for Perceptual Task 65

List of Tables

Page

Table 1. Effects of Automating Different Processing Stages on Performance. 34

Table 2. How the tasks in the proposed study are operationalized in terms of Parasuramon et al. (2000) Processing Stages and levels of information fusion. 49

Table 3. Mean Accuracy per Group..... 61

Table 4. Mean NASA TLX Workload Scores. 63

Table 5: REI Sub-Scale means. 64

THE EFFECT OF INFORMATION ACQUISITION AUTOMATION AND WORKSPACE DESIGN ON HUMAN PATTERN RECOGNITION FOR INFORMATION FUSION

I. Introduction

Background

Information fusion, the process of integrating and synthesizing information derived from multiple sources (Khaleghi, Khamis, Karry, & Razavi, 2013), is vital due to current complex and contested environments. In such environments, analysts must combine multiple types of intelligence data (e.g., open source, full motion video, and signals intelligence) to build a cohesive picture of the environment. Current sensor technology enables the collection of vast amounts of data at a rapid pace, which engenders very large volumes of complex, highly heterogeneous data, known to hinder the analysts' sensemaking process (Elm, Cook, Greitzer, Hoffman, Moon, & Hutchins, 2004). While the concept of information fusion can be important in a number of domains, it is particularly critical in the area of intelligence analysis and exploitation, where the success of military operations depends upon accurate, timely, and actionable knowledge.

The Data Fusion Information Group (DFIG) model, an extension of the earlier Joint Directors of Laboratories (JDL) data fusion model, distinguishes between different levels of fusion based on the goals of the fusion process. Low level fusion (Levels 0 and 1) concerns numerical data and is performed by machines. Level 0, Data Assessment, uses pixel or signal level data association and characterization to hypothesize the presence of a signal and predict its observable states. Level 1 fusion, Object Assessment, combines data on target objects for identification. High level fusion consists of levels 2 and 3, and is typically performed by

humans. Level 2, situation assessment, aggregates the data target group or situation understanding with the goal of identifying meaningful events and activities. Level 3 fusion provides an assessment of impacts relative to mission objectives, and includes goals such as estimating threat levels, predicting outcomes of particular decisions, and determining vulnerabilities and possible courses of action (Waltz, 2000; Kokar & NG, 2009). Although there are more levels of information fusion (Blasch, Steinberg, Das, Llinas, Chong, Kessler, Waltz, & White, 2013), levels 0-3 will be the focus of this research as they are where analysis and decision-making by intelligence analysts play the largest role.

Humans and machines bring different strengths and weaknesses to the information fusion process. Machines are more efficient at combining hard, machine-derived data. Humans currently perform better than machines at combining soft, unstructured, human-derived data (Pravia, Prasanth, Arambel, Sidner, & Chong, 2008) with unknown certainty levels (Jenkins, Gross, Bisantz, & Nagi, 2015; Hall, McNeese, Llinas, & Mullen, 2008). Davis, Perry, Hollywood, and Manheim (2016) demonstrated that threat prediction outcomes using soft data vary greatly with the machine fusion method used. High-level fusion requires an awareness of complex relations within past and future events, coupled with present knowledge and expertise, which makes the role of humans significant and crucial for the success of the process (Blasch, Lambert, Valin, Kokar, Llinas, Das, Chong, & Shahbazian, 2012). Within the information fusion literature, humans have been conceived of as providing pattern-recognition support for the computer's reasoning techniques (Hall, McNeese, Hellar, Panulla, & Shumaker, 2009). Because the human is essential to the information fusion process, information fusion systems should be investigated and understood within the context of human-machine teams.

Traditionally, in the information fusion literature, there has been little emphasis on how best to design the common workspace between human and machine such that the human's ability to recognize patterns in complex information is supported and enhanced (Riveiro, 2007; Hall, Hall, & Tate, 2001). Humans and machines must work collaboratively and respond in a situation-adaptive manner for true human-machine coagency to exist (Inagaki, 2014). In many domains, this harmony cannot be realized because, ultimately, a machine does not have real-life values and cannot be held accountable for decisions that result in disaster (Stensson & Jansson, 2014). However, because information fusion systems are designed to support human information acquisition and analysis, which would leave the issue of real-life values and accountability to the human, this domain is ripe for the development of collaborative and adaptive work between humans and machines.

Figure 1 depicts how a human-machine team can operate within an information fusion system. Data are collected from a variety of different sources (e.g., sensors, internet, other computers, written reports) within the environment. The data are allocated to either a human or a machine, depending on what the machine can or cannot handle or what processing needs to be performed on the data. The machine performs low-level fusion while the human employs reasoning to perform high-level fusion. A common workspace allows for both the human and machine to deposit information for subsequent analysis. With the proper design, this workspace can help to create a common understanding of the information between the human and machine while, ideally, fostering human pattern recognition needed to reach Levels 2 and 3 of information fusion.

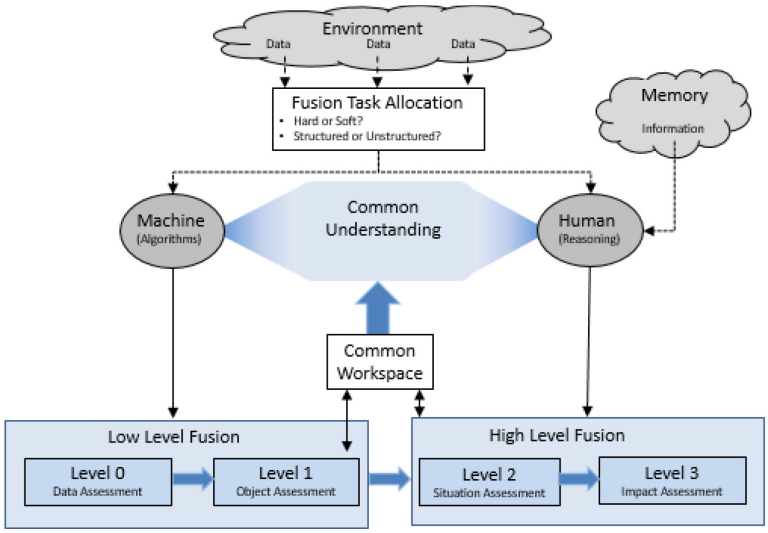

Figure 1. Information Fusion System as a Human-Machine Team (adapted from Turner & Miller, 2017). This diagram depicts how humans and machines can work together in an information fusion system within a common workspace to enable common understanding to successfully reach higher levels of information fusion with the goal of impact assessment.

Parasuraman, Wickens, and Sheridan (2000) proposed a model for types and levels of automation that has become a dominant paradigm used for the design and comparison of automation studies. They proposed a four-stage view of information processing which corresponds to equivalent stages in system (or machine) functions that can be automated. Information acquisition, the first stage, includes sensing and registering input data and is used to support the human's sensory process. Information analysis, the second stage, involves cognitive functions such as working memory and inferential processes. Decision and action selection automation, the third stage, supports the human's decision making process. Action implementation automation, the fourth stage, supports the human's response selection, including physically carrying out the task based upon the decision made. Any one of these four stages may

be automated on a level of 1-10, with 1 being completely manual and 10 being completely automated. This framework has been used to study the effects of adding these various machine functions on various performance criteria, including situation awareness (e.g., Kaber, Perry, Segall, McClernon, & Prinzel III, 2006; Sethumadhavan, 2009), performance time (e.g., Sauer & Rüttinger, 2007; Röttger, Bali, & Manzey, 2009), teamwork (Wright & Kaber, 2005), complacency (Reichenbach, Onnasch, & Manzey, 2011), and expertise development (Jipp, 2016).

Conceptual Framework

How do humans integrate information to recognize patterns? One might imagine that people consciously search for information, reason about how the individual components are related, and what it might mean. They might also search their memories for similar problems that they have encountered previously to try to make sense of the current situation. This structured process could be imagined as being deliberate and effortful. However, early evidence within the research literature on Gestalt psychology points towards a more unconscious process, one in which people have trouble explaining how or why they mentally assemble cues to perceive the whole because it occurs outside of their awareness. A gestalt is an integrated coherent structure or form, a whole that is different from the sum of its parts. Gestalts emerge spontaneously from self-organized processes in the brain. An emergent pattern is perceived when parts combine into wholes; it is a pattern derived from wholes, but not any individual part nor any single group of parts (Wagemans, Feldman, Gepshtein, Kimchi, Pomerantz, van der Helm, & van Leeuwen, 2012; Wagemans, Elder, Kubovy, Palmer, Peterson, Singh, M., & von der Heydt, 2012).

Certain aspects of Gestalt psychology are represented in contemporary frameworks of dual-processing in human cognition. Research shows that humans use two different cognitive systems to reason about the world (e.g. Evans, 1984; Patterson, Pierce, Bell, Andrews, & Winterbottom, 2009; Reyna, 2012; Betsch & Glöckner, 2010). One system is based upon unconscious pattern recognition and is called Type 1 processing. Type 1 processes, also known as intuitive processes, are those that do not require working memory and operate autonomously. They tend to be quick, have high capacity, and operate outside of conscious awareness. This type of processing, based on past experience, operates by meaningful, situational, subconscious pattern recognition, formed from statistical regularities encountered in the environment (Evans & Stanovich, 2013). According to Patterson and Eggleston (2017), information about these statistical regularities, picked up through implicit learning, is consolidated in procedural memory.

The other system is based upon more deliberate conscious processing that requires working memory resources and is called Type 2 processing. Type 2 processing, also known as analytic processing, involves cognitive decoupling and hypothetical thinking and puts a strong load on working memory. Cognitive decoupling is the ability to aid rational choices by running thought experiments. These processes are typically conscious, slow, capacity-limited, and processed serially (Evans & Stanovich, 2013). Patterson and Eggleston (2017) posit that intuitive processes actually represent the core of cognitive processing, with analytic processes serving as an exoskeleton by providing additional intellectual support to the intuitive system by way of working memory, consciousness, and language.

Some tasks encourage one type of processing over the other, and the way in which the workspace is designed in an information fusion system can affect the degree to which each

cognitive process is engaged. People are more likely to engage in intuitive processes when tasks are time sensitive, highly complex (Mishra & Pearman, 2015), have many redundant cues that are perceptually measured, and have a high amount of task uncertainty, with no available organizing principle (Hammond, Hamm, Grassia, & Pearson, 1987). However, for tasks with few cues, that allow reliable objective measurement, and afford some organizing principle, people are more likely to use analytic processes. Displaying task information in a way that either supports or does not support task conditions determines the congruency of the task. For analytic-inducing tasks, displays that contain symbolic logic are most congruent, and for intuition-inducing tasks, congruency is maximized for pictorially displayed information (Hammond, et al., 1987).

Problem Statement

Air Force Distributed Common Ground System (AF DCGS) analysts analyze data from disparate data sets, apply context to data, infer meaning from data, and make analytic judgments based on all available data to provide decision advantage. However, the pace at which data are generated is increasing exponentially and long ago exceeded the analysts' collective ability to find the most relevant data with which to make analytic judgments quickly enough to be relevant. According to the AF DCGS Artificial Intelligence, Automation, and Augmentation (AAA) Blueprint for Action, AAA technologies are crucial for future mission success and efficiency. The AF DCGS is seeking innovative approaches to human-machine teaming that use automation to augment human judgment (ACC A5/2D, 2021).

Adding automation to a task can have both positive and negative outcomes on overall performance. Automating parts of a task can free up resources to allow the human to better

perform the parts of the task for which he or she is responsible. However, automation has been blamed for task degradation in the event of automation failure. This degradation is presumably due to complacency, i.e., overreliance on automation, and the generation affect, i.e., disengagement with action alternative generation, which causes a loss of situation awareness (Hancock, Jagacinski, Parasuraman, Wickens, Wilson, and Kaber, 2013). A more complete understanding of how and when automation causes overall task success or failure is required to successfully develop common workspaces between humans and machines involved in information fusion.

Many automation studies using the Parasuraman, Wickens, and Sheridan (2000) model have widely conflicting results, making their application to information fusion systems problematic. Onnasch, Wickens, Li, and Manzey (2013) conducted a meta-analysis of 18 automation studies and concluded that there is a critical difference in the benefit of automation for tasks supporting information acquisition and information analysis verses tasks supporting action selection and action implementation. Under conditions of high workload, automation supporting information acquisition and analysis enhanced performance, while automation supporting action selection and implementation had negative consequences, especially following automation failure. However, Jipp (2016) found that automating information acquisition and information analysis hurt expertise development whereas automating action selection and action implementation accelerated expertise development, directly contradicting Onnasch et al.'s (2013) findings. Patterson (2017) suggested that many of these conflicts occur because the original Parasuraman, Wickens, and Sheridan model focused solely on analytical processing while neglecting the effects of intuitive cognition. Research is needed to investigate how automating part of the information fusion process affects humans' pattern recognition abilities,

and how these effects differ if the workspace is designed to engage humans' intuitive verses analytic cognitive systems.

Purpose Statement

The purpose of the current investigation was to examine how information acquisition automation affects the human's ability to detect patterns in data needed to reach higher levels of information fusion. Specific objectives were: 1) to provide empirical evidence that the intuitive system contains a procedural component; 2) to demonstrate that workspace design can induce intuitive or analytic processes; 3) to demonstrate the importance of correspondence between task type and actual cognitive demands for pattern recognition; and 4) to determine how automation affects the human's ability to learn spatial and textual patterns.

Significance of the Study

This research tied together the information fusion, human-machine teaming, and human cognition literatures to address a gap found within all three literatures. It was the first to explore workspace design for information fusion systems from a human-machine teaming standpoint to improve the information fusion process. Contributions to human-machine teaming research included (a) empirical data supporting the notion that discrepancies found within this literature are attributable to neglecting the fact that human cognition entails both analytical and intuitive processes, and (b) that automating tasks which encourage these processes has differential effects on human pattern recognition. Specifically, automating information acquisition for an intuition-inducing task yielded better human pattern recognition than automating information acquisition for an analysis-inducing task. However, when information acquisition was manual, there was not

a significant difference in performance between the intuition-inducing and analysis-inducing tasks.

This research was the first to reveal how workspace design changes the task-type, which can encourage application of either the human's intuitive or analytic system. The principle results of this investigation will lay the groundwork for designing common workspaces to support human-machine teaming in future information fusion systems. The results suggested that information acquisition automation should provide perceptual cues to encourage intuitive cognition. Intelligence analysts interacting with these systems will be better able to support machine-fusion pattern detection, thus improving the system's overall ability to understand the current situation and predict when threats are likely to occur.

Research Questions/Hypotheses

This investigation consisted of two experiments designed to satisfy the objectives listed above. Both of these experiments required participants to record daily routes of a person of interest. Unbeknownst to the participants, the daily routes were generated using an artificial grammar with complex rules that are difficult to learn consciously but much easier to learn unconsciously. After the learning phase, participants were given new route samples that were either generated from the same artificial grammar or generated from a different but similar grammar, and they were required to decide if the test routes followed the rules of the grammar from the learning phase. For Experiment 1, the maps were randomly scrambled for each trial to isolate the procedural component of the task. Task type was manipulated by the workspace to either favor intuitive or analytic processing. The cognitive demands were manipulated by having the pattern be favorable to the intuitive system by being location based, or favorable to the

analytic system by being label based. Experiment 2 investigated the effects of adding automation to the task type on human pattern recognition.

1) Experiment 1: How does the correspondence between task type and actual cognitive demands affect human spatial and textual pattern recognition?
    a) H_a 1: Human pattern recognition involving a procedural task will be better for patterns defined by location than for patterns defined by labels.
    b) H_a 2: Human pattern recognition involving a symbolic task will be better for patterns defined by labels than for patterns defined by location.
    c) H_a 3: There will be a significant interaction between task type and pattern type on human pattern recognition.
2) Experiment 2: To what extent does automating information acquisition affect the human's spatial pattern recognition ability differentially for perceptual/procedural versus symbolic tasks?
    a) H_a 1: Human pattern recognition for a perceptual task will be better with manual information acquisition than for automated information acquisition.
    b) H_a 2: Human pattern recognition for a symbolic task will be better with automated information acquisition than for manual information acquisition.
    c) H_a 3: There will be a significant interaction between task type and information acquisition automation on human pattern recognition.

Organization of the Study

Chapter 1 presented the background, conceptual framework, problem and purpose statements, significance of the study, research questions, and hypotheses. Chapter 2 reviews the

literature and research on human-machine teaming, dual processing theories of human cognition, and implicit learning as they relate to the design of common workspaces for humans and machines to facilitate human pattern recognition needed to reach high level information fusion. Chapter 3 covers the methodology and procedures used to gather data for the experiments. Chapter 4 presents the results of analyses and findings to emerge from the study. Chapter 5 offers a summary of the study and findings, conclusions drawn from the findings, a discussion, and recommendations for further study.

II. Literature Review

Chapter Overview

The purpose of this chapter is to introduce information fusion as currently defined in the literature, which is primarily focused on the role of the machine within the fusion process. Because this literature lacks studies on how humans fuse information, the psychology literature on human cognition was explored to understand basic phenomena associated with human reasoning, which may aid the design of the human computer interface within information fusion systems. Specifically, dual process theories, which generally propose that humans make decisions applying either analytical or intuitive decision making, was reviewed, as well as the topics of information integration, implicit learning, artificial grammar, and sequence learning. These latter topics are cognitive processes related to intuitive cognition that underpin much of human reasoning. Finally, the human-machine teaming literature was covered, and Parasuraman et al.'s processing stages. This review focused on whether humans can apply both intuitive and analytic cognition to fuse information, the advantage of each system over the other, and methods for triggering the use of one system or the other through workspace design. The results from this review was used to feed into the current research on how to design the common workspace between the human and the machine to facilitate human pattern recognition and the engagement of higher levels of information fusion.

Information Fusion

The information-fusion field dates back to the 1980's, with definitions of information fusion varying across the field. Boström and colleagues (2007) compiled a list of 31 definitions of information fusion with the goal of deriving a common definition and therefore unifying the

field. The definition they proposed was “The study of efficient methods for automatically or semi-automatically transforming information from different sources and different points in time into a representation that provides effective support for human or automated decision making”. This definition captures the critical ideas that fusion can be performed by both humans and machines, and that the overall purpose is to support decision making. Much of the information-fusion field relies on models or frameworks for discussing the fusion process.

The Joint Directors of Laboratories (JDL) data-fusion model is the most widely used method for categorizing data fusion-related functions today. Originally developed in the 1980’s to provide a common frame of reference for data-fusion discussions, it has undergone several revisions as the understanding of the domain has increased. The JDL model differentiates between data fusion processes by speaking of them in terms of different levels of fusion, where lower levels of fusion must occur before higher levels of fusion can be achieved. The Data Fusion Information Group (DFIG) model extended the JDL to contain concepts like estimation and management processes (Blasch, 2006).

Estimation processes of information fusion include levels 0-3 of the DFIG model. Level 0, Data Assessment, uses pixel or signal-level data association and characterization to hypothesize the presence of a signal and estimate and predict its observable states. Level 1 fusion, Object Assessment, combines data on target objects for identification. Level 2, Situation Assessment, aggregates the data target group (and situation understanding) with the goal of identifying meaningful events and activities. This level is where human pattern recognition becomes important (Blasch, Kadar, Salerno, Kokar, Das, Powell, Corkill, & Ruspini, 2006). Level 3 fusion, Impact Assessment, provides an assessment of impacts relative to mission objectives, and includes goals such as estimating threat levels, predicting outcomes of particular

decisions, and determining vulnerabilities and possible courses of action (Waltz, 2000; Kokar & NG, 2009).

Management processes of information fusion include functions such as sensor control, platform placement, and user selection, all of which are important for meeting mission objectives (Blasch et al., 2006). Level 4, Process Refinement, is the adaptive acquisition and processing of data for the purpose of planning and assigning tasks to resources that support mission objectives (Roy, Lambert, White, Karakowski, & Hinman, 2007). Level 5, User Refinement, entails refinement of the user's actions and cognitive model (Blasch & Plano, 2003). Level 6 fusion, Mission Management, refers to the adaptive determination of when and where an asset should be, route planning, and goal determination to support team decision making and actions (Blasch, 2006). Although management processes are an important part of the information-fusion process, the current research focused on estimation processes which relate to human pattern recognition, a precursor for reaching higher levels of information fusion.

Waltz and Llinas (1990) were the first to make a distinction between low level and high level information fusion. Low level fusion (Levels 0 and 1) concerns numerical data and is performed by machines to support target classification, identification, and tracking. Levels 2 and higher are considered high-level fusion, and typically involve abstract, symbolic information. High-level fusion is the ability of a fusion system, through knowledge, expertise, and understanding, to capture complex relations, reason over past and future events, utilize direct sensing exploitation and tacit reports, and discern the usefulness and intention of results to meet system-level goals (Blasch et al., 2012). High-level fusion requires human involvement because machines cannot currently handle the complexity of these processes on their own.

There are several reasons the information fusion process requires human involvement. Data that is derived from humans rather than collected by machines is referred to as soft data. When it comes to information fusion, humans are currently better than machines at combining unstructured, soft data (Pravia, Prasanth, Arambel, Sidner, & Chong, 2008). Soft data contains mismatches, missing items, misspellings, synonyms, etc. that are difficult for machines to process to enable association of related terms and concepts. Capturing this information in a consistent form that machines can understand remains a challenge (Linderman, Chase, Boury-Brisset, Nevitt, Henley, Read, Russel, & Hyden, 2012). Unstructured data require transformational methodologies to derive semantic understanding to exploit it. This conversion remains a significant challenge for automated algorithms because it requires sophisticated inference ladders (Pravia, Babko-Malaya, Schneider, White, Chong, & Willsky, 2009).

Another reason that humans are beneficial for fusing soft data is that this type of data contains unknown uncertainty levels (Jenkins, Gross, Bisantz, & Nagi, 2015; Hall, McNeese, Llinas, & Mullen, 2008). This is problematic because hard, i.e., machine-derived data, fusion methods require assigning uncertainty levels to input sources. The utility and validity of fusion operations are determined by the extent to which the properties of the fusion process are mathematically justifiable and applicable to the given task (Wickramarathne, 2012; Kokar, Tomasik, & Weyman, 2003). Davis and colleagues (2016) demonstrated that threat prediction outcomes using soft data vary greatly with the machine-fusion method used. They created narratives of two possible terrorists that contained several reports of varying reliability from friends, associates, police, and others. The probability that a person was a threat ranged from 0.3-1 using the various mathematical fusion techniques developed to deal with data uncertainty. Even though hard fusion methods may be used to mathematically reach higher levels of

information fusion, humans are still required to make the final threat-prediction decision based on their own knowledge and experience.

Because of unstructured data and missing uncertainty information, human reasoning is required to fill in gaps and recognize patterns. Hall and colleagues (2009) envisioned the human as a hybrid computer, supporting the automated computer's reasoning techniques with visual and aural pattern recognition and semantic reasoning. With this view, the computer processes signals and images and performs statistical estimation and feature abstraction, whereas the human acts as to perform meaningful pattern recognition. Visualization technologies in information fusion systems may be employed to stimulate human pattern recognition (Hall, McMullen, Hall, McMullen, & Pursel, 2008), which is an important factor in designing the workspace between the human and the machine.

Much research has gone into the machine-fusion aspect of the information-fusion literature, however, research in human cognition and workspace design that would enhance the fusion process has enjoyed much less attention. Blasch et al. (2012) conducted a literature review in the information-fusion domain and found that, of the many issues encountered in high-level information fusion over the past decade, the second most common theme was human and machine coordination that incorporates decision support. Despite the recognition that the workspace design is critical for human pattern recognition, there is little emphasis on how to present information to aid the human's ability to recognize patterns and reason about the information (Riveiro, 2007; Hall, Hall, & Tate, 2001). The human cognition literature was explored to learn more about how humans perform pattern recognition and how the design of the workspace between the human and the machine influences this process. The discussion of these

topics includes the coverage of dual-process theories and information integration, as well as implicit learning, artificial grammar, and sequence learning.

Human Cognition

Human cognition is composed of two distinct sets of processes or systems (Evans & Stanovich, 2013). The first set of processes is called analytic processing, which involves conscious deliberation and rule-based thinking tied to symbols and algorithms (Hèlie & Sun, 2010). Analytic processing is slow, limited in capacity, and involves working memory (Evans, 2008). Working memory permits task-relevant information to be maintained and regulated in a current, transient state (Baddeley, 1998). Analytical processing also entails cognitive decoupling and hypothetical thinking which puts a strong load on working memory. Cognitive decoupling is the ability to think hypothetically and to aid rational choices by running thought experiments. This flexibility likely allows people to use trial and error when looking for patterns in new environments.

The other set of processes is called intuitive processing which involves unconscious situational pattern recognition (Patterson & Eggleston, 2017). Intuitive processing is fast, possesses a large capacity, is separate from working memory, and is separate from conscious executive control. Both of these processes involve a form of pattern recognition that will be discussed below.

Information Integration

There is experimental evidence that, of the two systems of processing, the intuitive system is more effective than the analytic system in terms of information integration. Of the dual processing theories within the human cognition literature, Betsch's and Glöckner's Parallel-

Constraint-Satisfaction model (PCS) specifically theorizes about how humans integrate information to make decisions. Because the concept of information integration is a key component of the present research, the current section discusses Betsch and Glöckner's information integration theory, and presents some experimental evidence showing that intuitive cognition is superior to analytic cognition when performing information integration. This section ends with evidence revealing that fusing information using only the analytic system is damaging to performance.

Many real-world problems contain multiple pieces of information that must be mentally integrated to reach a solution. Betsch and Glöckner (2010) proposed that intuitive processes can manage multiple pieces of information in parallel while finding a solution that coheres (or adheres) to the constraints imposed by the situation. They called these processes automatic consistency-maximizing processes. Because these processes manage the information in parallel, they are sensitive to the holistic aspect of the information environment. The intuitive system determines the solution supported by the strongest evidence and modifies information so that one option dominates the others. Once a sufficient level of consistency is reached, an individual becomes consciously aware of the dominant option, terminating the decision-making process (Glöckner and Betsch, 2008a).

Intuitive processes use the information that is either salient within the environment or activated by memory, indicating that intuition relies on prior experience. The stronger the prior experience has been encoded in memory, the more likely it will be activated by situational cues and feed input into intuition (Betsch and Glöckner, 2010). The intuitive system operates more effectively in well-practiced environments that contain multiple cues (Evans & Stanovich, 2013). Long-term practice that comes with expertise can prompt the retrieval of memories.

Kiesel, Kunde, Pohl, Berner, and Hofmann (2009) looked at subliminal response priming effects in expert and novice chess players. Chess players were presented with a chess configuration and asked to determine if the king was in a "check" position or not. The task required combining multiple stimulus features rapidly (identity of the chess piece, location of the piece, and rules of movement of the chess piece) to make a decision. Immediately before presenting the chess board, a masked chess board/configuration was presented that either required a congruent or incongruent response as the target. Masked configurations induced subliminal priming for expert chess players, but not for novices. Both experts and novices failed to show priming when asked to detect whether a knight or a rook was displayed on a white or black field, which is irrelevant to playing chess. Experts undergo an unconscious pattern recognition process which is based on prior information about possible chess moves to fuse information and to make quick decisions.

Maier (1931) provided early experimental evidence that people use their intuitive systems to integrate information. In Maier's study, the task required individuals to grab two cords at the same time two that were hanging from the ceiling. The cords were separated at such a distance that it was not possible to hold one cord and walk over and grab the other cord. There were various objects in the room, e.g., clamps, pliers, etc. The solution was to tie an object, i.e., the pliers, on the end of one cord to make it a pendulum. The individual could then swing the pendulum while grabbing the stationary cord and wait for the pendulum to swing back and grab the other cord. If subjects had not solved the problem after a period of 10 minutes, a hint was given in the form of the experimenter walking across the room and "accidentally" brushing against one of the cords, causing it to sway. The hint induced a number of participants to think of the problem solution, i.e., pendulum.

When deriving the solution, the participants integrated critical information about certain attributes of the cord, i.e., free at one end, and pliers, i.e., its weight, which caused a change in their meaning. Maier found two distinct groups of subjects: those who experienced the solution holistically and those who derived the solution in two steps. For those who experienced the solution holistically, they did not report noticing the swaying rope, i.e., the hint, but claimed that the solution appeared suddenly as a complete idea. Those who derived the solution in two steps reported noticing the hint. Maier concluded that when a solution appears suddenly and holistically the factor which induces it may be lost to consciousness. That people were able to spontaneously come up with the solution after unconsciously integrating the hint with other information indicated that the intuitive system was responsible for information integration.

While the intuitive system has been shown to seamlessly integrate large amounts of information, forcing the analytic system to integrate information can be counterproductive to performance, as shown in a study by Betsch and colleagues (2001). These authors had study participants consciously memorize details of attention-grabbing advertisements, which would require working memory and analytical cognition, while at the same time quickly reading values of shares of hypothetical stocks that were presented as a running caption at the bottom of the display. The hypothetical stocks were represented by 15 values for each of 5 stocks, for a total of 75 values. The results showed that the participants could not consciously reproduce the sum of the values relating to each of the 5 stocks after performing the tasks as the participants were focusing their attention on the advertisements. However, the participants could accurately reflect the value of the stocks via an affective measure, the latter of which was mediated by intuitive cognition.

Betsch and colleagues (2001) interpreted these results as indicating that encoding value-laden information, i.e., monetary outcomes, was sufficient for inducing information integration. Moreover, under information-overload conditions, which were imposed by the dual-task situation of this experiment, information integration could occur intuitively and without conscious intention and deliberate control. However, information-integration efficiency was impaired if the participants employed analytical cognition. In contrast to integration by intuitive cognition, information integration via analytical cognition resulted in decreased information, which caused participants to consider other aspects of the situation, such as the size of the sample (Betsch, Plessner, Schwieren, & Gütig, 2001).

Glöckner & Betsch (2008b) found similar results in that information integration was hindered when people tried to use analytic processing. They had participants reveal hidden pieces of information one piece at a time. The participants considered only a few pieces of information on the most relevant dimension, i.e., the cue with the highest validity, and ignored other pieces of information. Yet when all of the information was presented at once within a very narrow timeframe to induce intuitive processing while at the same time preventing analytic processing, more than 70% of the participants' choices reflected more extensive and faster information integration. Participants were able to fuse more information in less time with unconscious pattern recognition and without conscious, rule-based operations.

This section provided experimental evidence that in many cases the intuitive system integrates more information at a faster rate than the analytic system. In terms of information fusion, to reach level 3 fusion, the information fusion system must first reach level 2 fusion, where pattern recognition becomes important. Because the intuitive system operates by unconscious pattern recognition, this system would seem to be related to level 2 fusion. To

understand intuitive processing better, this next section delves into how such patterns are learned through implicit learning.

Implicit Learning

It is believed that the situational patterns that are recognized by intuitive cognition are implicitly learned (Patterson et al., 2013). Implicit learning refers to learning without intention or awareness. According to Patterson and Eggleston (2017), intuitive cognition engages in meaningful, situational pattern recognition – the recognition of stimuli and cues which belong to meaningful patterns unfolding in space and time. Information about these statistical regularities and patterns that are implicitly learned are consolidated in procedural memory. Because of the importance of implicit learning for developing knowledge within the intuitive system, this next section will describe the current understanding of how implicit learning occurs and research methods for studying it.

Implicit learning requires the presence of relations between variables and cues which are repeated over time, and an adequate opportunity to learn such relations and cues (Kahneman & Klein, 2009). Wright and Whittlesea (1998) attributed implicit learning to the learning of experiences that are indirect or accidental and thus the person does not realize the source of their ability on the task. During implicit learning, the task can cause people to attend to different aspects of the stimuli, and they only focus on what is directly relevant to the task at hand. When there are statistical regularities associated with the stimuli with which they are working, they become sensitive to these properties. In other words, if the statistical regularities in the environment are not directly relevant to the task in which people are focusing on, the opportunity to implicitly learn those regularities is lost. Wright and Whittlesea found that people learned the implicit rules of a task when the task required them to focus on that aspect of the

task. However, those who did not focus on that aspect of the task did not learn those rules. Others have replicated these findings which involved other kinds of tasks (e.g., Kiyokawa, Dienes, Tanaka, Yamada, & Crowe, 2012; Van den Bos & Poletiek, 2010). So even though people can learn relations and cues outside of conscious awareness, such learning still seems to require the humans to attend to the relevant information.

Implicit learning studies typically contain three main components: (1) exposure to some rule-based environment which promotes incidental learning, (2) some measure to track the development of the participants' implicit learning, and (3) a determination of whether the participants possess conscious knowledge of their learning. There are two methods employed for studying implicit learning which are frequently used in the literature. These methods were combined in the current study to investigate the effects of workspace design and automation on human pattern recognition. The first method is known as artificial grammar learning, in which participants implicitly learn the rules of complex patterns created from artificial grammars. The second method is called sequence learning, in which participants implicitly learn patterns created from serial reaction time tasks (Cleeremans, Destrebecqz, & Boyer, 1998). Sequence learning contains a procedural component that contributes to the implicit learning, as indicated from the results of artificial grammar studies. Each of these methods are discussed next.

Artificial Grammar

Reber (e.g., 1967, 1969) used artificial grammar to study whether participants could implicitly learn patterns created from such grammar. The grammar was derived from a finite-state algorithm which generated patterns composed of five letters each. Specifically, the algorithm was represented as a directed graph and each transition in the graph produced a particular letter. Five transitions were required to create each 5-letter pattern. Importantly, each

pattern produced by the algorithm looked random despite the fact that the set of patterns possessed a subtle statistical dependency. In these studies, the question was whether individuals could learn these patterns at a rate that was faster than the rate required for patterns created randomly. The results revealed that participants could indeed learn the grammar-produced patterns quicker than random patterns. Moreover, the participants were unable to reproduce the rules that defined the grammar, which to Reber meant that the learning was implicit.

Reber (1967) performed a second experiment which involved a learning phase and a test phase. The learning phase was structured the same as in the first experiment. Participants were not told that there would be a test phase and were not told that there were grammatical rules underlying the construction of the patterns until just before the test phase began. During testing, the participants were presented with novel patterns and had to judge whether the structure of such patterns corresponded to the grammar. The participants were able to correctly identify 64% of the grammatical test items, which was significantly above chance performance. This seminal study demonstrated that implicitly learned information can be applied in a transfer-recognition task, which represented a new paradigm for studying implicit learning.

Knowlton and Squire (1996) demonstrated that artificial-grammar learning contained an implicit component, rather than analytically memorizing "chunks" of the grammar. A chunk is two or more components that occur together in artificial grammar strings. Performance for amnesic patients in judging grammaticality was similar to controls, however in recognition memory for chunks, amnesic patients performed worse than controls. Because the amnesic patients could not remember the chunks, yet performed equally judging grammaticality, the learning was unconsciousness and implicit. Knowlton and Squire also found that both controls and amnesiacs exhibited transfer of learning to a new set of patterns, which they attributed to the

fact that artificial grammar learning was different from perceptual priming because the new set of patterns eliminated the possibility of priming.

Several authors (Reber, 1989; Hogarth, 2001; Patterson et al., 2013; Patterson & Eggleston, 2017) have indicated that the situational patterns recognized by intuitive cognition are initially learned via implicit learning. In other words, these authors have indicated that implicit learning feeds intuitive cognition. This claim makes implicit learning an important aspect of dual-processing.

Sequence Learning

Sequence learning studies (e.g., Nissen & Bullemer, 1987), use a task called the serial reaction time (SRT) task. On each trial, a light appears, and participants execute a motor pattern by pressing the key directly below the light. The motor pattern used in Nissen & Bullemer (1987) entailed a repeating sequence of 10 key depresses which was repeated 10 times. Over time the participants' reaction time in depressing the keys got faster, which indicated that the participants were learning the motor pattern. However, because the participants typically could not verbally describe the sequence comprising the pattern, the learning was considered to be implicit.

Remillard (2017) used a version of the SRT task to examine whether learning a spatial sequence versus learning a nonspatial sequence, i.e., target identities, can proceed independently of one another. For this study the sequences were probabilistic rather than fixed. Shorter reaction times on high probability successors would indicate sequence learning. In one condition, only the spatial sequence was structured. In the other condition both the spatial sequence and the particular target identity was structured. Results indicated that both groups acquired equivalent spatial sequence knowledge, meaning that learning the nonspatial sequence did not interfere

with learning the spatial sequence. Thus, Remillard suggested that spatial sequence learning and nonspatial sequence learning, in this case target identities, involve different neural mechanisms. Experiment 1 used a methodology similar to Remillard by varying whether the pattern involved a spatial component or whether it involved target identity, with the goal of determining whether the motor component contributes to implicit learning independently of the perceptual component of the task.

Knowledge contained within the intuitive system is likely developed through implicit learning (Reber, 1989; Hogarth, 2001; Patterson et al., 2013; Patterson & Eggleston, 2017). Studies reveal that people can learn complex patterns without being able to consciously describe the rules defining the patterns. Spatial and nonspatial sequence learning likely involves different neural mechanisms. Because spatial sequence learning in the SRT contains a procedural and perceptual component, this type of learning likely favors the intuitive system. Because the nonspatial pattern involved letters, i.e., symbols, in Remillard's study, it likely favored the analytic system. Adding automation to information acquisition should differentially affect the human's ability to learn patterns depending on whether the task is a perceptual/motor task verses a symbolic task. That is, when implicit learning is spatial, adding automation to information acquisition should impair learning because it removes the motor component of the task. And when implicit learning is symbolic, adding automation to information acquisition should enhance learning because it frees up workload, allowing the analytic system to better learn the underlying patterns.

Now that human cognition, human reasoning, and dual-process theories and their sub-processes, i.e., implicit learning, artificial grammar, and sequence learning, have been discussed, human-machine teaming and the Parasuraman et al. processing stages will be discussed next. In

doing so, information about the topics already covered will inform the coverage of these new topics. With respect to human-machine teaming, the next section explores the literature in terms of how automation affects human cognition, depending on the task, to give the reader a clearer understanding of how human pattern recognition in information fusion systems may be either helped or hindered by automation.

Human-Machine Teaming

The interface between human and machine should enable the human to recognize the automation's intention, understand why automation computes what it does, share situation awareness with automation, and show automation's functional limitations (Inagaki, 2014). The word "interface" that is used so often in the human-machine teaming literature does not fully capture the type of automation that was deployed for this research. In automation studies, the automation frequently provides information in a display for the human to see. However, because the proposed research will be investigating human-machine teaming in information fusion where the machine obtains information from sources separate from the human, the term "interface" will be replaced with the term "workspace" to recognize that both human and machine are equal partners who draw upon different resources during the process of information fusion. The design of the common workspace for enhancing the effectiveness of the human-machine relationship in the accomplishment of shared goals remains a critical issue for human-machine teaming.

Because limited research has gone into the workspace itself that is distinct from the interface, the value of the common workspace between a human and a machine must be assessed by consulting other sources, such as the value found by looking at human teams and their workspaces. Gergle, Kraut, and Fussel (2013) investigated how a common workspace facilitated

communication and benefitted performance between two people working together on a task. They manipulated the immediacy of visual information in the workspace and found that immediate visual feedback facilitated collaboration by improving both situation awareness and conversational grounding. This affect was even greater for more complex tasks. This research demonstrated the benefit for the human when the other teammate can communicate through the shared workspace, especially for complex tasks.

In an information fusion system, there are key elements required for the user to interact with sensed data. The first element is a common framework from which to ingest data, algorithms, and processing techniques. The second element is that both the human and the machine use complementary approaches, meaning that their actions are compatible and perform similar functions. The third element is that the interaction between the human and the machine should allow both to work with various tools for analysis and subsequent information dissemination (Blasch, Rogers, Holloway, Tierno, Jones, & Hammoud, 2014). All three of these elements point to the need for the workspace to be designed in such a way that the purpose of the information fusion system can be realized when the human and machine truly work as a team with shared goals and understanding of the information being transferred between them.

Given the research that has been conducted on intuitive and analytic cognition, there are actions that can be taken with the common workspace between the human and the machine in an information fusion system to encourage one cognitive system or the other. A method for encouraging the activation of one cognitive system over the other involves the introduction of either symbolic stimuli or perceptual stimuli. Perceptual stimuli include objects and pictures and symbolic stimuli include words. Evidence in the literature that perceptual stimuli engage the intuitive system while symbolic stimuli engage the analytic system will now be presented.

Scott (1967) investigated the differences between free recall of perceptual and symbolic stimuli. People were told to memorize items that were either presented as pictures or as text. What Scott found was that people performed better at recalling perceptual items than symbolic items. More importantly, perceptual stimuli showed a greater tendency to cluster than symbolic stimuli as measured by the sequential occurrence of two items in the same category on the free recall sheet. Scott interpreted these results as evidence for the idea that people are more likely to reorganize perceptual stimuli into groups at the time of encoding relative to symbolic stimuli. Because people are more likely to unconsciously encode and reorganize pictorial information over textual information for later recall, the intuitive system is more likely to be engaged with perceptual information than the analytic system.

Patterson and colleagues (2013) provided evidence that people may be better at recognizing patterns with their intuitive systems engaged. Objects, e.g., tanks, trucks, viewed in a simulated environment yielded better pattern recognition than letters viewed in the same environment. Because the perceptual stimuli, the objects, are more likely to engage the intuitive system and the symbolic stimuli are more likely to engage the analytic system, these results suggest that people more effectively learned the patterns subconsciously using their intuitive systems rather than their analytic systems.

There is reason to believe that procedural tasks may engage the intuitive system over the analytic system. As discussed earlier, intuitive cognition engages in meaningful, situational pattern recognition. Embedded in these situated patterns are procedural elements, which inform what can be done in a situation. According to Patterson and Eggleston (2017), intuitive cognition involves the recognition of stimuli and cues as belonging to meaningful patterns, or signs, unfolding in space and time. Information about these statistical regularities and patterns are then

consolidated in procedural memory. Meaning making thus entails intuitive pattern synthesis of different memories of various situations. Given the likely role of procedural memory for intuitive decision making, procedural tasks should be more likely to engage the intuitive system.

Displaying information in a way that either supports or does not support task conditions determines the congruency of the task. Hammond, Hamm, Grassia, and Pearson (1987) looked at how the congruency of the task affected performance. One of their tasks was intuition-inducing in which participants had to judge highway aesthetics. Another task was analysis-inducing, in which participants had to judge highway capacity. Information was either displayed to favor the intuitive system using filmstrips or the analytic system, i.e., participants were given bar graphs and asked to devise mathematical formulas for calculating aesthetics and capacity. Their results showed that performance was better when the cognitive properties of the task corresponded to the task properties. Thus, for analytic-inducing tasks, displays that contain symbolic logic are most congruent, and for intuition-inducing tasks, congruency is maximized for pictorially displayed information.

Adding elements to the workspace between the human and machine to deliberately engage either the analytic system or intuitive system may be beneficial for certain tasks. People are more likely to unconsciously reorganize perceptual stimuli into categories than symbolic stimuli (Scott, 1967), and are better able to implicitly learn patterns with perceptual stimuli (Patterson et al., 2013), linking both of these types of tasks to intuitive cognition. Additionally, the literature suggests that procedural tasks likely rely on intuitive cognition. Hammond et al. (1987) showed that when task type corresponded to the cognitive demands of the task, performance was better than when the task type does not correspond to the cognitive demands. Thus, for tasks that contain cognitive demands that are favorable for intuitive cognition, adding

perceptual or procedural components to the workspace should improve performance over symbolic elements. The human-machine teaming literature provides evidence that how the workspace is designed, to favoring one system over the other, affects how humans may recognize patterns as part of an information fusion system.

Parasuraman, Sheridan, and Wickens (2000) developed the most common framework for looking at human-machine teams. They outlined a four stage view of human information processing. The first stage is the acquisition and registration of multiple sources of information. Stage two is the conscious perception and manipulation of processed and retrieved information in working memory. Stages three and four are decision making and response selection. They equated these four stages of human information processing to system functions that could be automated. The first stage is information acquisition, which includes the sensing and registration of input data to support human sensory processes. Stage two, information analysis, involves working memory and inferential processes. Stage three and four are decision and action selection and action implementation. Any of the four stages may be automated at a level of 1-10, with 1 being completely manual and 10 being completely automated. Higher levels and later processing stages generally require increasing degrees of automation as it is typically assumed that later stage automaton includes at least the level of automation in the earlier stages. This framework has been used to study the effects of automation of any of these four processing stages on situation awareness, workload, and complacency throughout the years. Research has shown that automation applied to information analysis or decision-making functions leads to differential system performance benefits and costs (Parasuraman & Wickens, 2008).

Research studies that have manipulated one or more of these processing stages have conflicting results. Onnasch, Wickens, Li, and Manzey (2013) conducted a meta-analysis of 18

automation studies and concluded that there is a critical boundary in the degree of automation between tasks supporting information analysis and automation supporting action selection. Automation supporting information analysis enhanced performance, while negative consequences occurred for automation supporting action selection. The authors explained these results by saying that because automating processing stages 1 and 2 support situation assessment, performance improves. However, actively choosing actions manually, i.e., stage 3, also supports situation assessment, so automating this stage starts to cause problems in the event of automation failure when humans must take over the task. Jipp (2016) found that information automation, including both information acquisition and information analysis, hurts expertise development whereas decision automation accelerates expertise development, seemingly contradicting Onnasch et al.'s (2013) findings. Patterson (2017) proposed that many conflicting results from these studies can be explained because the original Parasuraman et al. model focused solely on analytical processing while neglecting the effects of intuitive cognition.

Table 1 presents a summary of the positive and negative effects found by automating various processing stages. Under each study listed, the automated information processing stages that led to better performance than the other processing stages contain a "+". The processing stages that led to worse performance than the others under automation contain a "-". This section will present those studies that looked at information acquisition in an attempt to determine if the way the workspace was designed influenced those results.

Table 1. Effects of Automating Different Processing Stages on Performance. Plus signs indicate a benefit, whereas negative signs indicate poorer performance.

Study	Information Acquisition	Information Analysis	Action Selection	Action Implementation
Onasch et al. (2013)	+	+	-	-
Kaber et al. (2006)	+	-	-	+
Kaber et al. (2005)	+	-	-	+
Sarter & Schroeder (2001)	+	+	-	
Röttger et al. (2009)		+	+	+
Jipp (2016)	-	-	+	
Wright & Kaber (2005)	+	+	+/-	
Sethumadhavan (2009)	+	-	-	-

Kaber, Perry, Segall, McClernon, and Prinzel III, (2006) looked at how adaptive automation of the four processing stages affected situation awareness and workload. They used an air traffic control task in which participants used a mouse to point to and click on an aircraft icon to select it before clicking on a command button labeled “Query” to request flight information. The control box also contained other words such as “change airport”, “hold”, “resume”, etc. that an operator used to tell the aircraft how to proceed. Information acquisition was automated by adding a scan line that rotated around the radar display to briefly reveal a trajectory projection as it passed over the aircraft icons, which would reveal the aircraft’s

destination and route. Operator perception, i.e., Level 1 Situation Awareness, and Total Situation Awareness improved when automation was applied to information acquisition. In this case, automating information acquisition added a perceptual element to the task that was not present under manual conditions, potentially encouraging the operator's intuitive system to pick up on patterns that would have otherwise been outside of awareness, the presence of these patterns might enhance situation awareness.

Kaber, Wright, Prinzel III, and Clamann (2005) used the same basic air traffic control task as Kaber et al. (2006), with the screen only partially visible. The map was black and contained a portal that would reveal a small square of the map at a time. Before aircraft could be cleared, participants had to find and track the aircraft by moving the portal while issuing a clearance. Information acquisition was automated by allowing the computer to control the portal in an inward spiral towards the display center. Participants could then cause the portal to lock onto or off of an aircraft to begin or end tracking. Information acquisition automation relieved workload and time pressure. Kaber and colleagues concluded that humans are better at adapting to adaptive automation that is applied to sensory and psychomotor information-processing functions, i.e., information acquisition and action implementation, than to automation applied to cognitive functions, i.e., information analysis and decision making. This workspace contained both a perceptual and procedural component, but the method of moving the portal and tracking aircraft as part of information acquisition was particularly intrusive, and could have contributed to reduction of performance in the information analysis and action selection automation conditions, because they still had to manually control the portal, which may have increased workload enough to reduce attention to important information.

Sarter and Schroeder (2001) investigated the effect of using different display types as decision aids to help pilots handle icing encounters in aircraft. Pilots in status condition received ice accretion location in the form of a top-down view of the aircraft. Those using command displays were provided recommendations concerning the appropriate power setting, flap setting, and pitch attitude for the observed icing condition. Status and command displays in the study supported different stages of the decision-making process. The status display supported information acquisition and analysis, whereas the command display supported primarily the action selection stage. Performance costs with inaccurate information were greater for command displays, meaning that automating information acquisition and analysis induced better performance than automating action selection. However, as Patterson (2017) noted, the status display favored intuitive processing and the command display favored analytic processing. In this task, intuitive processing would have been more advantageous than analytic processing because the task had an element of time pressure and high workload.

Röttger, Bali, and Manzey (2009) studied the effects of automation on workload and behavior for a fault management task. Operators were required to monitor subsystems for faults, and correct the malfunctions upon discovery. In the case of a fault, one type of automation displayed the fault diagnosis and suggested a sequence of actions, providing a high level of automation in the information analysis and action selection processing stages. The second aid provided the same fault diagnosis, but also implemented the suggested corrections, giving operators a chance to veto. Their results provided support that automated aids increased performance and allowed operators to reduce the frequency of information sampling and manual interventions, meaning the operators became more effective and more efficient. The fault detection task Röttger and colleagues used was a perceptual task, consisting of monitoring a line

graph for levels going outside of two red lines on the graph. Due to the perceptual nature of the task, information acquisition, although not automated, was likely driven by the intuitive system.

Wright and Kaber (2005) looked at the effects of automation applied to different stages of information processing on team performance in a threat detection task. One teammate's task as intelligence officer was to consider several data sources to determine the classification of a target. The other teammate, the air commander, had to use the information provided by the first teammate to destroy enemy aircraft or let friendly aircraft through. They found that an increase in information acquisition automation led to an increase in the ratio of information transferred to information requested, but it did not affect overall task performance. The air commander's display was perceptual, more likely to engage the intuitive system. However the intelligence officer's display was more symbolic in nature, which would favor the analytic system. It is difficult to determine if the differences Wright and Kaber found in their study were due to the automation of different processing stages, or if the workstations that encouraged the intuitive system for one person and the analytical of the other affected the task performance in some way.

Sethumadhavan (2009) automated different information processing stages to look at the effects of information processing stage automation on situation awareness and collision detection. Following automation failure, those working with information acquisition automation were significantly faster in detecting collisions and had higher overall situation awareness than all other automation types. The task was an air traffic control task that was perceptual in nature. For the secondary task people had to monitor numbers and push a button when they saw a number that was outside of the range they were given. Because this task involved numbers, it was a symbolic task. Results of the secondary task revealed superior performance by those working with information analysis, action selection, and action implementation automation

relative to those working with information acquisition automation. These results were attributed to an overreliance on collision detection aids in the air traffic control task, claiming that these participants either had more cognitive resources, or chose to allocate more cognitive resources to the secondary task. Better performance may have been obtained for the information acquisition automation because the automation consisted of adding color to the aircraft to cue their altitude, which would have made the perceptual cues more salient for the intuitive system to aid in processing.

Jipp (2016) investigated how automating information acquisition and analysis versus action selection affected the cognitive abilities needed for expertise development. Participants performed an air traffic control task and had to perform certain activities according to the Parasuraman et al. (2000) information processing stages. For information acquisition, participants had to identify positions and states of all aircraft, and information analysis involved projecting paths of aircraft. These two processes were automated together to form an information automation condition. Jipp found that action selection automation induced better performance than information automation. Additionally, those who received action selection automation support improved more during training than the information automation group. Jipp concluded that a learner's ability to reason about an activity may be hindered by the use of information automation. Using decision automation may stimulate reasoning, increase the load on information processing ability, and accelerate expertise development. The air traffic control task used in this study was a perceptual task, ripe for inducing intuitive cognition. Automating information acquisition and analysis may have disrupted the participants' perceptual systems from unconsciously picking up the regularities in the environment, leading to degraded expertise development.

As this review has suggested, automating different processing stages differentially affects performance. And given that the workspace design can trigger either analytic or intuitive cognition, lining up the processing stages with human cognition could clear up some of the ambiguity in the human-machine teaming research literature. Patterson (2017) reviewed 120 articles and books and concluded that intuitive cognition dominates human reasoning and decision making across a wide variety of lines of research (heuristics and biases, dual-process theory, fuzzy-trace theory, naturalistic decision making, and automatic processes). Taking the findings from this review, Patterson proposed an updated taxonomy of human-automation interaction that removed some of the redundancy in the levels of automation descriptions and the information processing stage descriptions, while demonstrating how analytic and intuitive cognition affect the different processing stages.

Patterson (2017) noted that information acquisition and information analysis both lend themselves to benefit from intuitive cognition if the automation allows people to quickly capture the overall gist of the information using perceptual cues. Action implementation and decision selection would be stages where analytic cognition should play a bigger role, as these stages are more likely to require processes such as reading, remembering information from working memory, rule-based reasoning, and hypothetical thinking. Automation at these levels would include things such as presenting decision alternatives or using texts or symbols, which would favor analytic processing. After examining how the human cognition and human machine-teaming literatures tie together, the next section will explore how both of these literatures tie together to provide insights for information fusion.

Levels of Fusion and the Parasuraman et al. Processing Stage

To gain insights from the human-machine teaming research literature that can be applied to the information fusion literature, the processing stages from Parasuraman, Sheridan, and Wickens (2000) will be linked to comparable information fusion levels. Because the first 3 levels of fusion are the most important for pattern recognition and decision making, these levels will be the focus of this section. Then an example using a pattern of life analysis will be presented for clarification.

Level 1 fusion, i.e., Object Assessment, combines data on target objects for identification. Automating this level of fusion corresponds to automating the information acquisition processing stage, in which multiple pieces of information are sensed to support the human's sensory processes. For example, if an analyst uses HUMINT reports and full motion video (FMV) to track a person of interest over the course of a day, this would correspond to Level 1 fusion, with the identification of the person's route being the sensed "object". If a machine automatically extracted the information out of HUMINT reports and the FMV and provided the locations to the analyst, this would be an example of automating information acquisition as the human is no longer physically acquiring the information to determine the person's daily route.

Level 2 fusion, situation assessment, combines information above and beyond Level 1 fusion, to develop an overall understanding of the underlying situation by identifying meaningful events and activities. These events and activities can be identified by looking for underlying patterns in the information. Automating this level of fusion would be equivalent to automating the information analysis processing stage. To continue the pattern of life analysis example, if the analyst looks at the person's daily routes over the course of several days or

weeks to establish a pattern for their movements, the individual is performing level 2 fusion. Having a machine analyze the movements to predict the person's pattern of activity would be an example of automating information analysis.

Level 3 fusion, impact assessment, is where decision making first comes into the information fusion process. It is at this level where the information analysis outputs must inform a decision, whether it be a decision about threat levels, predicting outcomes, or deciding where vulnerabilities are and possible courses of action. Automating the decision and action selection processing stage would correspond to automating Level 3 fusion. In the pattern of life example, based on an analysis of the person's pattern of movement over many days, an analysts is performing level 3 fusion when determining if the person violated their normal pattern of activity or not. Having a machine make this decision and flag if it notices an anomaly in the person's daily patterns would be an example of automating this level of fusion.

Even though there has not been much in the way of research on human cognition in the information fusion literature, indicating how the levels of fusion map to the processing stages in Parasuraman et al.'s (2000) framework demonstrates how the literature on human machine teaming may be applied to the information fusion literature. Furthermore, looking at how automation may affect the analytic and intuitive human cognitive systems differentially can explain conflicting results found in the human machine teaming literature and be applied to the development of common workspaces in an information fusion system.

Summary

The purpose of this chapter was to review the relevant literature related to information fusion, human cognition, and human-machine teaming to learn what could be done with the

common workspace between the human and the machine to facilitate human pattern recognition and the engagement of higher levels of information fusion. It was by examining all three of these literatures that gaps within one literature could be answered by one of the other literatures. The findings from each literature contributed to the direction of this research.

The information fusion literature focuses on levels of fusion, with human pattern recognition being important for reaching levels 2 (situation assessment) and 3 fusion (impact assessment) (Blasch et al., 2006). Because this literature lacked specific studies on interface design, the human machine teaming literature was reviewed. Onnasch, et al. (2013) determined that automation supporting information analysis enhanced performance, while negative consequences occurred for automation supporting action selection. Jipp (2016) found that information automation, both information acquisition and information analysis, hurts expertise development whereas decision automation accelerates expertise development, seemingly contradicting Onnasch et al.'s (2013) findings. Patterson (2017) proposed that many conflicting results from these studies can be explained because the original Parasuraman et al. model focused solely on analytical processing while neglecting the effects of intuitive cognition.

Human cognition is composed of two distinct processes. Intuitive processes are those that do not require working memory and operate autonomously. This type of processing is contextualized and operates by subconscious pattern recognition. Type 2 or analytic processing involves cognitive decoupling and hypothetical thinking and puts a strong load on working memory. The intuitive system is effective at quickly picking up information based on perceptual cues (Patterson, 2017) and when a procedural component is involved (Patterson and Eggleston, 2017). Intuitive cognition is believed to emerge through implicit learning, which occurs when

people learn without intention or sometimes awareness. Information about these statistical regularities and patterns are then consolidated in procedural memory.

Perceptual, procedural, and symbolic tasks can be used to trigger either the intuitive system or the analytic system. Spatial sequence learning and nonspatial sequence learning involve different neural mechanisms (Remillard, 2017). People are more likely to unconsciously reorganize perceptual stimuli into categories than symbolic stimuli (Scott, 1967), and are better able to implicitly learn patterns with perceptual stimuli (Patterson et al., 2013), linking both of these types of tasks to intuitive cognition. Additionally, the literature suggests that procedural tasks likely rely on intuitive cognition. However, no empirical studies could be found that specifically established that intuitive cognition operates on a procedural component as well as a perceptual one. Hammond et al. (1987) showed that when task type corresponded to the cognitive demands of the task, performance was better than when the task type does not correspond to the cognitive demands.

It is only by looking at the human cognition literature along with the human-machine teaming literature that some of the conflicting studies in the human-machine teaming literature can be understood. Automating information acquisition to highlight perceptual cues to enable the human to quickly understand the meaning of the information should foster pattern recognition. When both perceptual and motor sequences are available, learning is not purely perceptual (Robertson, 2007). Removing the motor sequence forces individuals to learn only within the perceptual domain (Dennis et al., 2006). If the workspace already contains perceptual cues that favor the intuitive system, then automating information acquisition removes the motor/procedural component of the task, thereby potentially decreasing the intuitive system's full potential. Recall that information acquisition automation can relieve workload and time

pressure (Kaber et al., 2005), which in the case of a workspace designed to engage the intuitive system, should not help as the intuitive system is not dependent on workload. However, as the analytic system is constrained by workload, automating information acquisition in a workspace that favors the analytic system should improve the human's ability to integrate the information and identify patterns.

Results from these three different fields of research reveal something important about how humans and machines integrate information and how the common workspace between them affects a human's ability to detect patterns in data. According to the information fusion literature, analysts must recognize patterns in the data to reach levels 2 and 3 of information fusion, but this specific literature lacks any research on how humans actually perform pattern recognition. Human cognition research contains neurological evidence suggesting that pattern analysis is a distinct skill that does not require specific conscious processing (e.g., Cohen & Squire, 1980). This research also contains prolific experimental evidence that people can and do integrate vast amounts of information outside of conscious awareness (Maier, 1931; Glöckner & Betsch, 2008; Keisel et al., 2009). These results suggest that a common workspace between the human and the machine in an information fusion system should foster pattern recognition so long as it induces the human's intuitive system. From the human-machine teaming research, Jipp (2016) presumed that his discovery that expertise development was hindered by automating information acquisition occurred because automating the acquisition process hinders a learner's ability to reason about an activity. Other studies produced mixed results regarding the effects of automating information acquisition. However, Jipp's air traffic control task was a very perceptual task and ripe for inducing intuitive cognition. Because the intuitive system is not workload dependent, increasing automation should not significantly benefit performance on an

intuition-inducing task. In fact, it is possible that for this type of task, automating information acquisition could cause people to miss patterns formed by the information in the environment that they would have recognized if they were acquiring the information on their own. However, for tasks that engage the analytic system, decreasing workload by automating information acquisition should improve the human's ability to learn patterns because the analytic system relies on working memory, which is limited in capacity. The combination of results from these three distinct research communities led to the rationale for the current research.

III. Methodology

Chapter Overview

The purpose of this chapter is to present the research methodology that was used to investigate how information acquisition automation affects the human's ability to detect patterns in data needed to reach higher levels of information fusion. This chapter describes the general methodology, as well as specifics for Experiments 1 and 2.

General Methodology

Participants

A total of 53 participants were used for this study (20 for Experiment 1 and 32 for Experiment 2). One participant's data was discarded due to software malfunction during the experiment. The number of participants was based on convention from previous implicit learning research showing that 8 people for each condition is enough to produce statistically significant differences (i.e. Patterson et al., 2013; Kiyokawa et al., 2012). Participants were recruited by email or verbal requests from across the Air Force Research Laboratory and the Air Force Institute of Technology and included both active duty military (14) and civilians (38). There were 36 males and 16 females over the age of 18, with a mean age of 39.

Apparatus/Stimuli

The experiment was run on a laptop (HP ZBook 15) with a screen resolution of 1920 x 1080. The screen size measured 15.5 inches diagonally. A standard 2 button mouse was used. Participants sat a comfortable viewing distance from the laptop at either a desk or a table. Questionnaire responses were collected by pen, paper, and computer.

Participants viewed a map of a large geospatial scene subdivided into nine segments. Each segment had three elements: 1) situational scene (particular buildings, trees, cars, section of a street, etc.), 2) label – description for the main focal point of the scene (e.g., clinic), and 3) spatial location of the segment (e.g., A1-C3). To the left of the map, coordinates appeared in one of two different chat windows, and participants were asked to record the coordinates in the order they appeared. Each coordinate corresponded to a location that a person of interest stopped during the day. Unknown to the participants, the possible daily routes of the individual were generated using a finite state grammar from Reber, Kassin, Lewis, & Cantor (1980). This grammar is represented in Figure 2. Each pass through the finite state algorithm is called an exemplar. The length of the exemplars were capped at 8 for this study, yielding 43 possible exemplars. Twenty exemplars were used for the learning phase of the study, with each exemplar being repeated once, yielding 40 trials. Twenty exemplars were also used in the testing phase. The testing phase also contained 20 “foils”, generated from a similar, but different finite state algorithm, providing 40 trials total in the testing phase. The presentation order of exemplars in both learning and training phases were generated using the uniform random number generator function in Microsoft Excel.

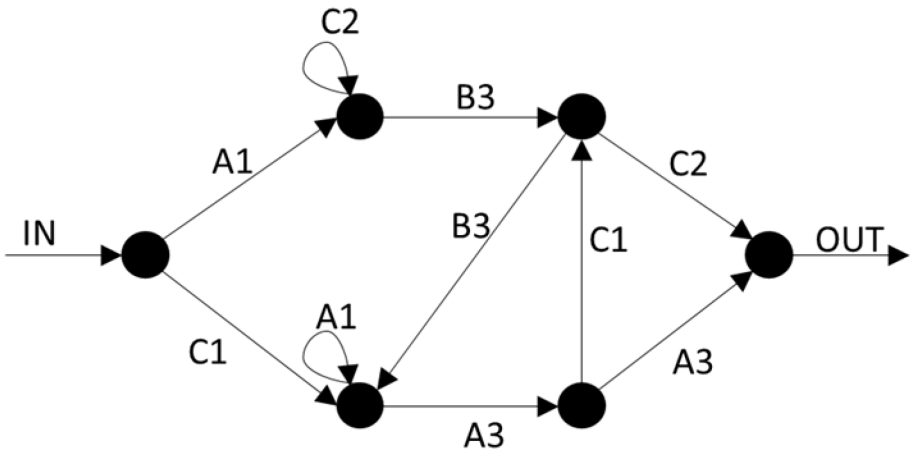

Figure 2. Finite State Algorithm used to generate routes. The letters and numbers represent locations on a map. Starting at the "IN" node, the arrows indicate which node is possible to go to next. One pass through the grammar, an exemplar, yields a daily route through the map. For example, one route is A1, C2, C2, B3, C2.

Information was defined as the route traveled in one day, which corresponded to the information acquisition processing stage and to Level 1 fusion (object identification, with the "object" being the route). Information Analysis was defined as the pattern built from experiencing multiple routes, which corresponded to Level 2 fusion (gaining a better understanding of the situation). Level 3 Fusion was measured during test trials. Like the training trials, information was obtained through a chat window. Half of the routes were unexperienced paths taken through the same finite-state grammar as used during training, and half of the routes violated the rules of the finite-state grammar, but used the same possible stops. The participant's task was to determine if the person violated his or her normal pattern of activity, indicating that

he or she may be about to do something unusual resulting in projection into the future for impact assessment, also corresponding to the decision making processing stage.

Table 2. How the tasks in the proposed study are operationalized in terms of Parasuramon et al. (2000) Processing Stages and levels of information fusion.

Task	Processing Stage	Fusion Level
The path built for 1 trial (day)	Information Acquisition	Level 1 (Object Identification)
Pattern built from experiencing multiple paths	Information Analysis	Level 2 (Situation Assessment)
Did the person violate normal pattern of activity?	Decision Making	Level 3 (Projection)

For both experiments, task type was manipulated by the workspace to either favor intuitive processing or analytic processing. The perceptual/procedural task required using the mouse and left clicking on the coordinates on the map as they appeared in one of the two chat windows. After the participant clicked on the first coordinate, a second coordinate appeared in one of the chat windows. Clicking on the second coordinate on the map produced an arrow going from the first coordinate to the second, as shown in Figure 3. As more coordinates were recorded, arrows were drawn to each coordinate. Once the exemplar was finished, a submit button appeared, and clicking that button cleared the map and took the participant to the next day. This task was thought to encourage intuitive processing because it contained both a procedural and a perceptual component. The motor movements of the mouse made this a procedural task and the arrows drawn directly on the map made it a perceptual task as well.

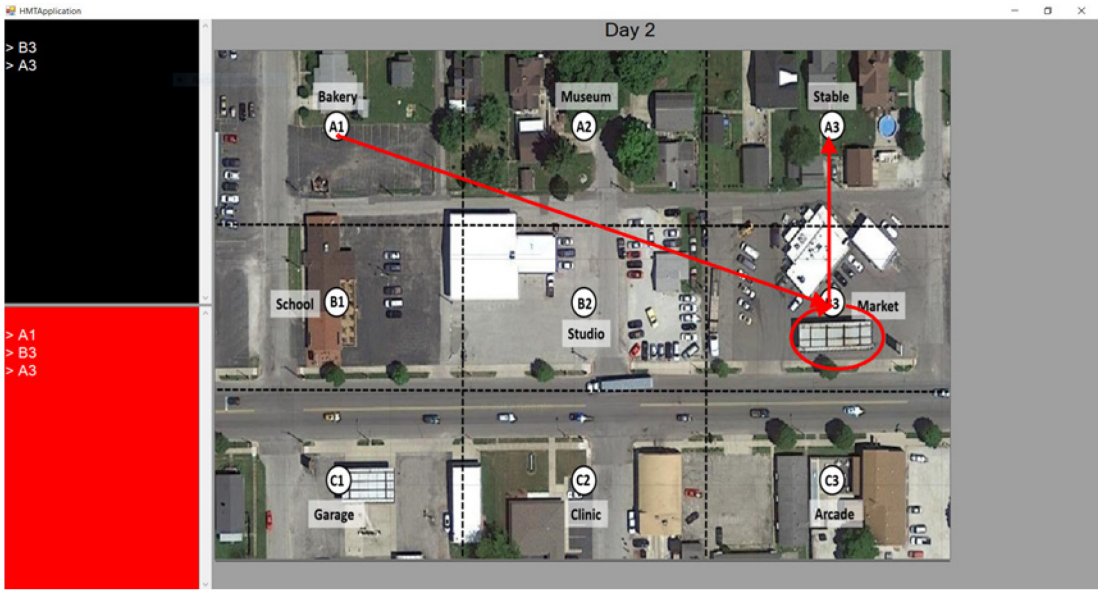

Figure 3. Perceptual/Procedural Task. In this example, the route traced is the exemplar A1, B3, B3, A3, A3 from the finite state algorithm used in the study. The text box, highlighted in red, contained the next coordinate that needed recorded.

For the symbolic task, participants obtained the information from a chat window, looked at the same map used in the perceptual/procedural task, and typed the name of the locations in order, essentially creating a list of waypoints. The workspace was no longer the map, but a document on which to type, as shown in Figure 4. This task involved words, making it symbolic in nature. Additionally, looking at the map to obtain the name of the location of the stop before typing it into another workspace generated additional workload than that for the perceptual/procedural task. This type of workspace was more likely to activate the analytic system.

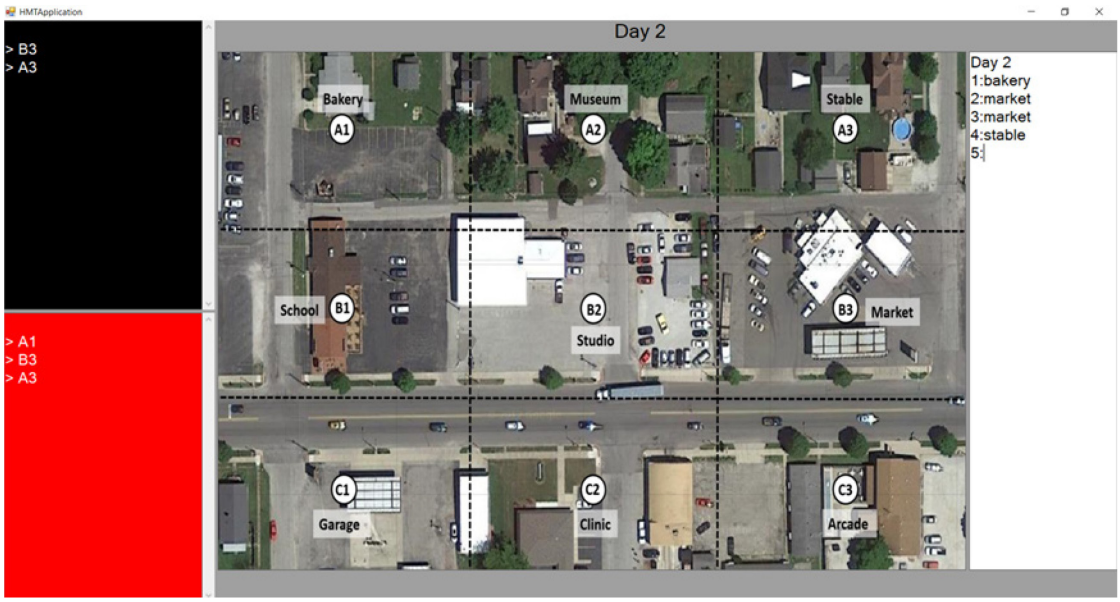

Figure 4. Symbolic Task. In this example, the route recorded in the upper right of the screen is the exemplar A1, B3, B3, A3, A3 from the finite state algorithm used in the study. The text box, highlighted in red, contained the next coordinate that needed recorded.

Procedure

Participants in both experiments were randomly assigned to one of 4 conditions. Participants sat at a desk or table with the laptop at a comfortable viewing distance. After obtaining informed consent, the experimenter read instructions on how to record the person of interest's daily route. These instructions are provided in **Appendix A**. They completed a 2 minute training where they practiced recording routes. Once they indicated they knew what to do, they began the experiment. Participants were told that accuracy was more important than speed.

Participants began the learning phase of the study in which they recorded routes for 40 days. After 40 days, participants received instructions telling them that from here on out, the person's routes would be different than what they had seen before. They were told that some of

the routes would fit in with the person's overall regular pattern of activity and that some would not. For the remainder of the experiment, participants completed the test phase. They recorded the routes just like they did in the learning phase, but after clicking "submit" each day a box popped up and asked them if the person's pattern of movements seemed consistent with the pattern of movements up to that point. Participants responded by left- clicking "yes" or "no" using the mouse. Accuracy data was collected, but participants did not receive feedback regarding the accuracy of their responses. At the end of the experiment, participants in Experiment 2 completed the NASA TLX using the computer to complete the workload assessment questionnaire. Participants in both experiments completed the Rational-Experiential Inventory-40 (REI-40), which is provided in **Appendix B**, and a brief demographic questionnaire, which is shown in **Appendix C**, using pen and paper. The entire experiment lasted approximately one hour.

Pilot Study

A pilot study was conducted to determine that the artificial grammar selected for this study was neither too easy nor too difficult to learn. Four participants were run, two in the Perceptual/Procedural task and two in the Symbolic task. Performance needed to be better than chance to indicate that the structure could be learned in the absence of any other manipulations. Both groups had the same mean performance (M = 57.14%). Statistics were not conducted because the number of participants in each group was small enough to lead to the potential for a Type II error. However, the trend in the pilot data indicated that with enough subjects, performance in both groups would be roughly equivalent and greater than chance. These results

were promising and allowed for the manipulations in both Experiments 1 and 2 to either enhance or degrade performance.

Experiment 1

The purpose of Experiment 1 was two-fold. First it was designed to determine how the correspondence between task type and actual cognitive demands affect human pattern recognition. Second, it was designed to empirically demonstrate that there is a procedural component to intuitive cognition. Experiment 1 was a 2 (task type: procedural, symbolic) by 2 (pattern type: labels, locations), full factorial between subjects experimental design. Task type was described in the general methodology. Cognitive demands were manipulated by pattern type whereby the actual pattern was favorable to the intuitive system, by being location based, or favorable to the analytic system, by being label based.

Participants viewed a map of a large geospatial scene subdivided into nine segments. Each segment had three elements: 1) situational scene, i.e., particular buildings, trees, cars, section of a street, etc., 2) label – description for the main focal point of the scene, e.g., clinic, and 3) spatial location of the segment, e.g., A1-C3. For this experiment, both the situational scenes and the labels were randomly scrambled for each trial. Figure 6 shows a pair examples. Scrambling the maps removed the perceptual component of the task, isolating the procedural component.

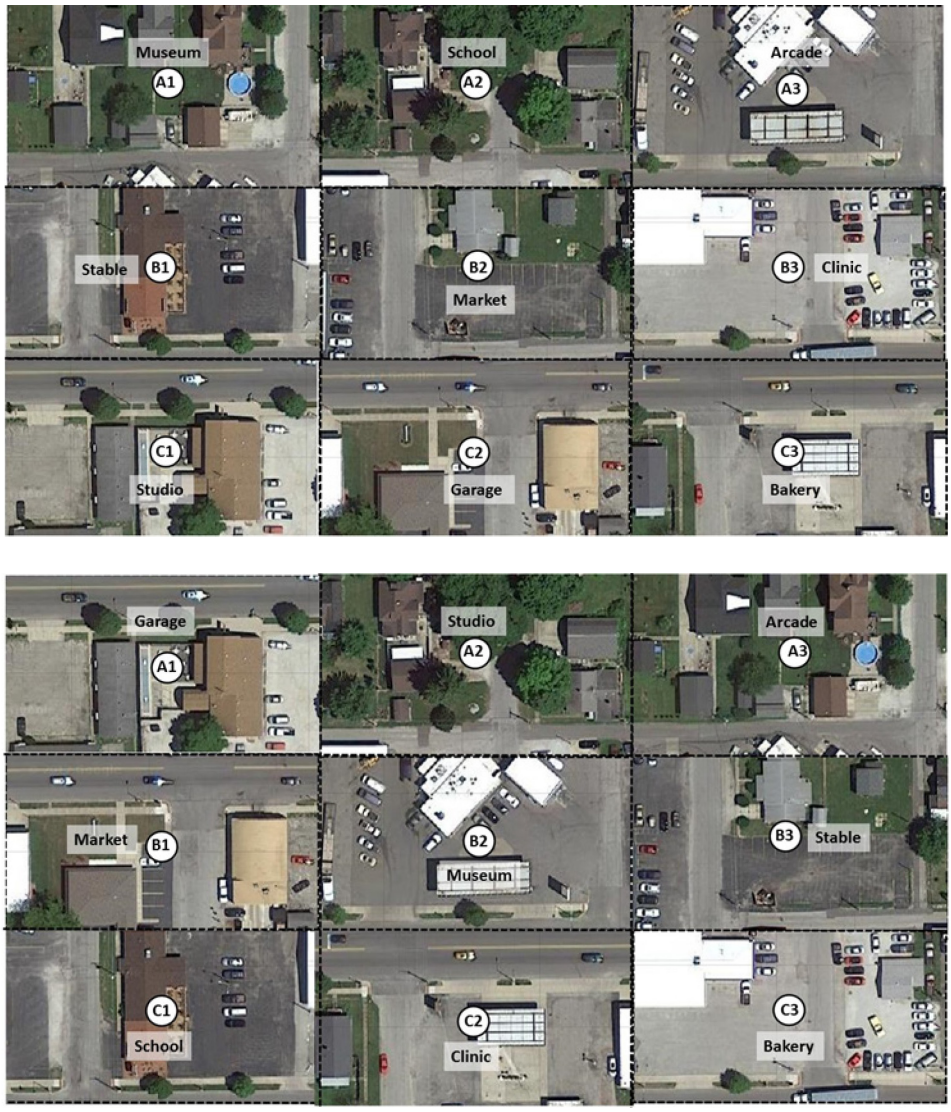

Figure 5. Scrambled Maps. The 9 segments and the labels were randomly scrambled for each trial to isolate the procedural component of the task.

The second independent variable was pattern type. In all conditions, the same grammar was used. In the labels conditions, the labels were grammatical and the scenes and spatial locations were random, as shown in Figure 7. In this condition, the pattern may have included "garage", "stable", "stable", but the location and the building were irrelevant. Because learning

this pattern required processing the words, this pattern type was more symbolic in nature, and should be easier to learn with a workspace more favorable to analytic processing. In the Locations conditions, the spatial location were grammatical and the scenes and labels were random (refer back to Figure 3). In this condition, one exemplar may have been "C1", "A3", "A3", but the labels and buildings were irrelevant. Learning the pattern required processing physical locations and should be more favorable to intuitive processing.

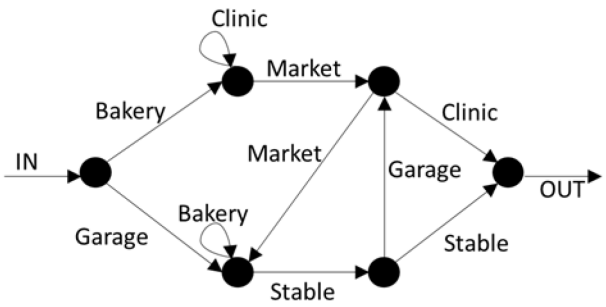

Figure 6. Label-Based Grammar. The labels represented buildings on a map. Starting at the "IN" node, the arrows indicate which node is possible to go to next. One pass through the grammar (an exemplar) yielded a daily route. For example, one route was "bakery", "market", "clinic".

Experiment 2

Experiment 2 served to investigate how automating information acquisition affected human pattern recognition. This study used a 2 (task type: perceptual, symbolic) x 2 (information acquisition: manual, automated), full factorial between subjects experimental design. The dependent measure was performance on forced-choice test trials, in which success required the ability to learn patterns during training trials.

Task type was manipulated by the workspace to favor either intuitive or analytic cognition as described in the general methodology section. Information Acquisition was also varied. In the fully manual task, the human obtained coordinates from a chat window and recorded the routes between the points. In the fully automated condition, the human watched the machine record the routes between coordinates. Automation for this experiment was always accurate, but to ensure that participants attended to the automation, they were told that their job was to make sure that the coordinates were accurately recorded for each day and to write down on a sheet of paper any days in which they noticed the automation had erred.

Summary

The purpose of the proposed activities was to make a valid and reliable determination of how automating information acquisition affected humans' ability to integrate information needed for reaching Level 3 Information Fusion. Experiment 1 served to establish that a procedural component exists with intuitive cognition. Experiment 2 looked at how removing this procedural component via automation would harm pattern recognition for intuition-inducing tasks but help pattern recognition for analytic-inducing tasks. Care was taken to execute the methodology in a way to produce data sets which lend themselves to statistical analysis. The analyses were performed via a systematic process including exploration, assumption testing, hypothesis testing, results production, and findings interpretation. The overall goal was to produce generalizable findings as a contribution to the human/systems integrations knowledge base.

IV. Analysis and Results

Chapter Overview

The purpose of this chapter is to present the results from both experiments to exhibit how information acquisition automation affects the human's ability to detect patterns in data which are needed to reach higher levels of information fusion. All analyses were conducted using Microsoft Excel 2016 and NCSS 2021 Statistical Software (NCSS, LLC. Kaysville, Utah, USA, ncss.com/software/ncss). For each participant, the accuracy on test trials was recorded. A One-Sample t-test was conducted on the dependent measure of accuracy for each group to determine if pattern recognition accuracy was greater than chance performance ($\mu > 50$). It was assumed that individuals were able to demonstrate greater performance as a result of learning if accuracy was greater than chance. A between-subjects Analysis of Variance (ANOVA) was conducted on the dependent measures when performance improved from chance due to learning. Tukey's HSD was used for all pairwise comparisons.

Experiment 1

Because people implicitly learn the aspect of a structure that is most useful to the task they perform while they encounter the structure (Wright & Whittlesea, 1998), it was hypothesized that there would be a significant interaction between task type and pattern type on human pattern recognition. Human pattern recognition for a procedural task would be better for spatial patterns when the information is conveyed through locations than for spatial patterns when the information is conveyed through labels. Pattern recognition for a symbolic task would be better for patterns by labels than for patterns by locations. The data was distributed normally according to the Shapiro-Wilk's test for normality ($W_n = .971$), the variance was constant

according to the modified Levene test at $\alpha = .2$, and the residuals were normally distributed as determined by examining the normal probability plot of residuals.

A one-sample t-test was conducted on the dependent measure of accuracy for each group to determine if pattern recognition performance was greater than chance performance ($\mu > 50$). For those who had the procedural task and the patterns defined by labels, there was no indication that learning was greater than chance performance ($M = 53$, $SD = 3.26$), $t(4) = 2.06$, $p > .05$. Those who had the procedural task with the patterns defined by locations also did not appear to learn the patterns ($M = 52$, $SD = 9.08$), $t(4) = .492$, $p > .05$. For those in the symbolic task with patterns defined by labels, performance was no greater than chance ($M = 46.5$, $SD = 2.85$), $t(4) = -2.75$, $p > .05$. Pattern recognition performance for those in the symbolic task with task patterns defined by locations was also at chance levels ($M = 48.5$, $SD = 5.48$), $t(4) = -.61$, $p > .05$.

Because there was no evidence that people in any condition were able to demonstrate better than chance performance as a result of learning, the study was stopped after running 20 participants. The top panel of Figure 8 shows the grammar used to create the foils for test trials for this experiment. There were only three differences between this grammar and the grammar that participants were exposed to in the learning phase of the study, which are highlighted with red font in the figure. Allen and Reber (1980) found that people were better at detecting non-grammatical items which contained multiple errors than grammars with a single violation. It was determined that the lack of improved performance could have been due to the difficulty of distinguishing between two very similar grammars during the test trials rather than the inability to learn during the training. For this reason, the foils grammar was changed for Experiment 2, as reflected in the bottom panel of Figure 8.

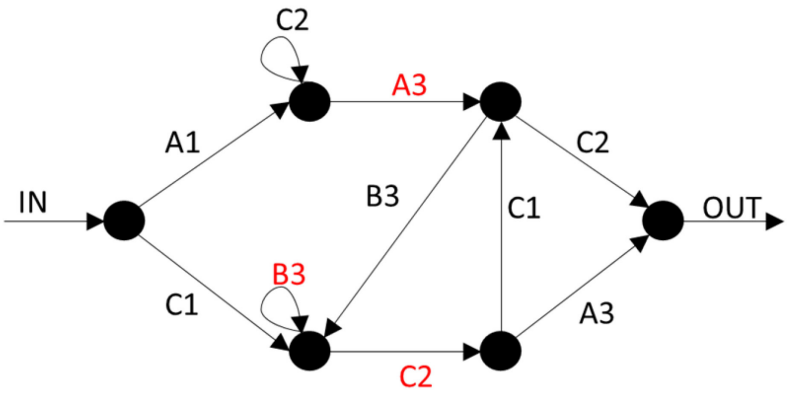

Experiment 1 Foils

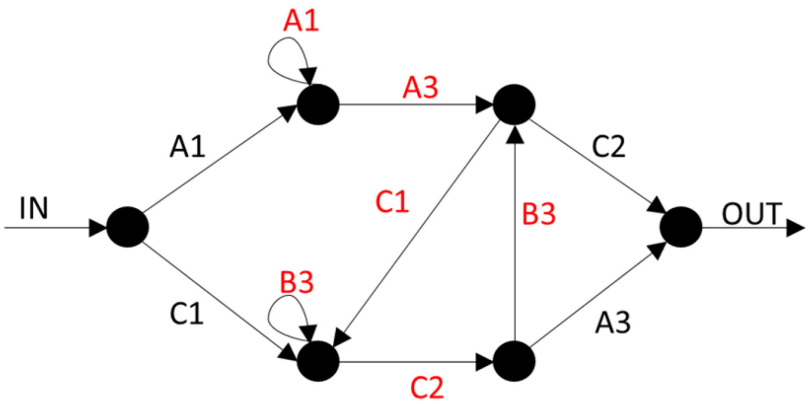

Experiment 2 Foils

Figure 7. Foils Grammars used for Experiments 1 and 2. The coordinates highlighted with red font represent differences from the artificial grammar used for training.

In summary, the means for each group were low overall, suggesting that participants' performance did not improve due to learning the pattern in either the procedural or the symbolic tasks in Experiment 1. For this reason, the artificial grammar used to generate the foils during test trials was updated to reflect more differences from the training.

Experiment 2

A significant interaction between task type and information acquisition was anticipated. Because adding automation to the perceptual/procedural task removed the procedural component for intuitive processing, increasing automation was expected to disrupt the human's ability to recognize patterns in the data. However, for symbolic tasks, increasing automation was expected to free up workload, thus improving the human's ability to perform pattern recognition.

One-sample t-tests were conducted on the dependent measure of accuracy for each group to determine if pattern recognition performance was greater than chance performance ($\mu > 50$). Table 3 shows the means for each condition and standard error for each mean. Those who had the perceptual task with manual information acquisition performed higher than chance on accuracy scores during test trials, ($M = 58.125$, $SD = 11.16$), $t(7) = 2.06$, $p < .05$. People in the perceptual task with automated information acquisition also performed higher than chance on test trials ($M = 63.75$, $SD = 5.51$), $t(7) = 7.06$, $p < .001$. However, for those with the symbolic task with manual information acquisition, performance was no greater than chance ($M = 51.56$, $SD = 8.12$), $t(7) = .54$, $p > .05$. Pattern recognition performance for those in the symbolic task with automated information acquisition was also at chance levels ($M = 44.375$, $SD = 9.23$), $t(7) = -1.72$, $p > .05$.

Table 3. Mean Accuracy per Group. This table shows the mean and standard error for each combination of independent variable used for Experiment 2.

Task by Information Acquisition	n	Mean	Standard Error
Perceptual/Manual	8	58.125	3.95
Perceptual/Automated	8	63.75	1.95
Symbolic/Manual	8	51.5625	2.87
Symbolic/Automated	8	44.375	3.26

A 2 x 2 between-subjects ANOVA with the factors of task type (perceptual, symbolic) and information acquisition (manual, automated) was performed on accuracy. Figure 9 depicts the mean accuracy by task type and information acquisition. ANOVA results showed a statistically significant interaction between the effects of task type and information acquisition on pattern recognition accuracy, $F(1, 28) = 4.29$, $p < .05$. Simple main effects analysis showed that when information acquisition was automated, performance on the perceptual task (M = 63.75%) was significantly higher than for the symbolic task (M = 44.375%; $p < .001$). When information acquisition was manual, there was no significant difference between performance on the perceptual task (M = 58.125%) and the symbolic task (M = 51.563%, $p > .05$). Performance on the perceptual automated task was significantly better than performance on the symbolic manual task ($p < .01$) and performance on the perceptual manual task was better than

performance on the symbolic automated task ($p < .01$). Overall, performance was better in the perceptual task ($M = 60.94\%$) than in the symbolic task ($M = 47.97\%$, $p < .001$).

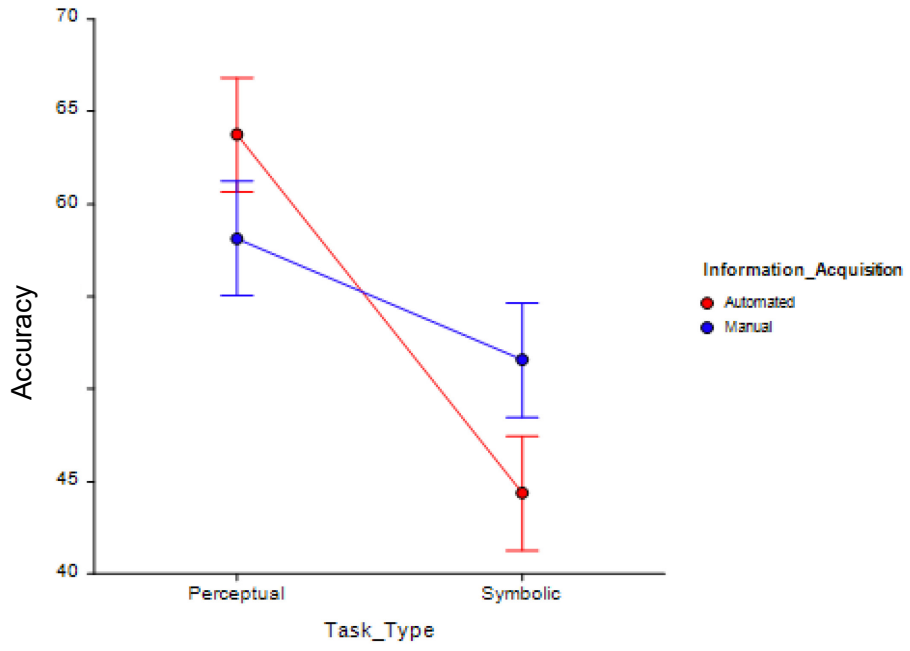

Figure 8: Means and Standard Errors Plot of Accuracy by Task Type and Information Acquisition. Each point in the graph depicts the mean of accuracy of the eight participants in each of the four conditions (Perceptual/Automated, Perceptual/Manual, Symbolic/Automated, Symbolic/Manual).

To see if automation decreased workload, a 2 x 2 between-subjects ANOVA with the factors of task type (perceptual, symbolic) and information acquisition (manual, automated) was performed on the NASA TLX workload scores. Table 4 presents the average perceived mental

workload scores for each condition, which yielded no significant differences between either task type or information acquisition automation.

Table 4. Mean NASA TLX Workload Scores. This table presents the means of workload scores for each group in Experiment 2.

Condition	n	Mean
Perceptual/Manual	8	45.21
Perceptual/Automated	8	38.96
Symbolic/Manual	8	39.41
Symbolic/Automated	8	43.2

The overall means of each of the REI-40 subscales were calculated and are presented in Table 5. Pearson product-moment correlation coefficient was calculated for each of the subscales and accuracy, yielding no significant correlations between any of the subscales and overall accuracy.

Table 5: REI Sub-Scale means. This table shows the mean scores for rational ability and engagements and experiential ability and engagement.

REI-40 Subscales	n	Mean	Standard Deviation
Rational Ability	32	4.05	.48
Rational Engagement	32	4.05	.51
Experiential Ability	32	3.29	.56
Experiential Engagement	32	3.11	.64

A Pearson product-moment correlation coefficient was computed to assess the relationship between accuracy for each condition and overall rationality and overall experientiality scores from the REI-40. It was hypothesized that rationality scores would be positively correlated with accuracy for the people who had the symbolic task, because that task type should most trigger analytic cognition, but negatively correlated with the perceptual task as that should most strongly be associated with intuitive cognition. Additionally, it was hypothesized that experientiality would be positively correlated with accuracy for those who had the perceptual task, as that should trigger intuitive cognition, but be negatively correlated with performance for the symbolic task with the labels pattern. The only significant correlation was a negative correlation between experientiality and accuracy for those who experienced the

perceptual task (r = -.5, p < .05). Figure 10 shows that as experientiality scores decreased, accuracy scores increased.

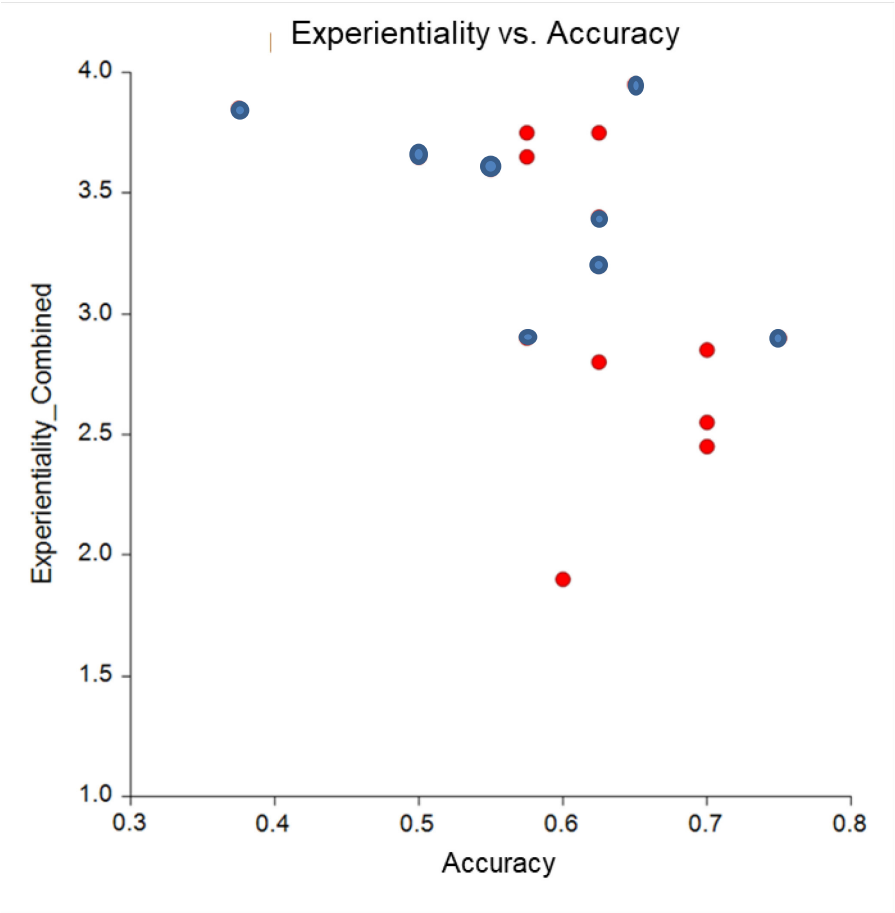

Figure 9. Scatter Plot of Mean Experientiality Scores and Accuracy for Perceptual Task. There was a negative correlation between experientiality and accuracy (r=-.5, p<.05, N = 16). The blue dots are the means of the manual condition and the red dots are the means of the automated condition.

In summary, automating information acquisition affected pattern recognition differently for a perceptual task than for a symbolic task. When information acquisition was automated, pattern recognition was better on the perceptual task than for the symbolic task. However, when

information acquisition was manual, there were no significant differences in pattern recognition performance between the perceptual and symbolic tasks. In general, performance on the perceptual task was better overall. The means for the symbolic groups were low overall, suggesting that participants were not able to learn the pattern in either the automated or the manual tasks for the symbolic conditions. There were no significant differences in mental workload for either task type or information acquisition automation. There was a relationship found between overall self-reported experientiality scores and accuracy for those who experienced the perceptual task. The lower people rated themselves on reliance on and preference for experiential thinking, the more pattern recognition performance improved.

Investigative Questions Answered

The purpose of the current investigation was to examine how information acquisition automation affects a human's ability to detect patterns in data needed to reach higher levels of information fusion. Experiment 1 was designed to examine how the correspondence between task type and cognitive demands affect human spatial and textual pattern recognition. It was hypothesized that there would be a significant interaction between task type and pattern type on human pattern recognition. Human pattern recognition involving a procedural task was hypothesized to be better for patterns defined by location than for patterns defined by labels whereas pattern recognition involving a symbolic task would be better for patterns defined by labels than for patterns defined by location. Unfortunately, the foils grammar which was applied in Experiment 1 appeared to be too difficult to distinguish from the training grammar. This result was not expected as learning was observed in the pilot study. However, with only 2 participants

per condition in the pilot study, the results were likely spurious. Thus learning did not occur for any group and the results of Experiment 1 did not support these hypotheses.

Experiment 2 was designed to investigate the extent to which automating information acquisition affects human spatial pattern recognition ability differentially for perceptual versus symbolic tasks. It was hypothesized that there would be a significant interaction between task type and automation on human pattern recognition such that pattern recognition for a perceptual task would be better with manual information acquisition than for automated information acquisition and pattern recognition for a symbolic task would be better with automated information acquisition than for manual information acquisition. Results from Experiment 2 showed that automating information acquisition affected pattern recognition differently for the perceptual task than for the symbolic task, although not in the direction that was expected. These results will be further discussed in Chapter 5.

Summary

The purpose of this chapter was to present the results from both experiments to exhibit how information acquisition automation affects a human's ability to detect patterns in the data needed to reach higher levels of information fusion. The results of one-sample t-tests on the dependent measure of accuracy to test if performance was greater than chance was presented for both experiments. An ANOVA on the dependent measure of accuracy, the results of the Pearson product-moment correlation coefficients between rationality and experientiality scores from the REI-40 and pattern recognition accuracy, and mental workload results from the NASA-TLX were presented for Experiment 2. The chapter ended with a summary of the overall investigative

questions and to which extent they were answered by this research. Discussion of these results will be presented in Chapter 5.

IV. Conclusions and Recommendations

Chapter Overview

The purpose of this chapter is to present the conclusions drawn from the data analysis results and discuss how the findings relate to the literature presented in Chapter 2. The overall conclusions and discussions of what they mean is presented, the significance of the research is discussed, along with recommendations for the application of these results to information fusion systems, and recommendations for future research.

Conclusions of Research

The purpose of this study was to investigate the extent to which automating information acquisition affects human spatial pattern recognition ability differentially for perceptual versus symbolic tasks. People were able to implicitly learn spatial patterns when the workspace was designed to trigger intuitive cognition. Moreover, automating information acquisition in a way that highlighted perceptual cues favorable to the intuitive system enhanced pattern recognition. These results are consistent with Patterson's (2017) model of human-automation interaction

Results showed that when information acquisition was performed through manual operations, pattern recognition performance was similar for both the perceptual and symbolic tasks. However, when information acquisition was automated, pattern recognition was better for the perceptual task than for the symbolic task. Because the symbolic task was designed to trigger analytic cognition, automating information acquisition should have decreased workload to free up more working memory resources to consciously learn the patterns. However, NASA-TLX results showed no significant differences in the amount of perceived workload between the automated and manual conditions, indicating that the automation for this task did not affect

perceived workload. Patterson (2017) suggested that tasks favorable to analytic cognition would benefit more with automating decision selection or action implementation because these are the processing stages where working memory is important.

Automating information acquisition for the perceptual task improved pattern recognition over the manual symbolic task. The perceptual task was designed to encourage intuitive cognition, which Patterson's (2017) model of human machine interaction indicates would benefit more from automating information acquisition and information analysis. Automating the perceptual workspace in this study permitted the automation to present results which highlighted perceptual cues with the arrows representing the pattern of travel being drawn between map locations. This likely encouraged intuitive cognition above and beyond the manual perceptual task because it allowed people to passively watch as exemplars from the pattern were drawn for them, allowing them to quickly grasp the meaningful gist of information.

In general, pattern recognition was better for the perceptual tasks than it was for symbolic tasks. These findings support previous claims that forcing analytic cognition to integrate information hurts pattern recognition (Betsch et al., 2001; Glöckner & Betsch, 2008b). Implicit learning, learning without intention or awareness, is by its very definition an intuitive process. Statistical regularities from the environment are unconsciously learned and consolidated in procedural memory, which the intuitive system uses to engage in meaningful pattern recognition (Patterson and Eggleston, 2017). Because the symbolic workspace likely encouraged analytic cognition, people who had these workspaces were consciously integrating information at the time of encoding rather than relying on their intuitive systems. People are more likely to unconsciously encode and reorganize pictorial information over textual information (Scott,

1967) for later recall. This likely led to the improved performance on pattern recognition that was seen in the perceptual workspaces.

Significance of Research

This research, together with the summary of information fusion, human-machine teaming, and human cognition literatures address a gap within all three literatures. It was the first to explore workspace design for information fusion systems from an intuitive cognition teaming standpoint to improve the information fusion process. Contributions to human-machine teaming research included (a) summarizing empirical data supporting the notion that discrepancies found within this literature are attributable to neglecting the fact that human cognition entails both analytical and intuitive processes, and (b) demonstrating that automating tasks which encourage these processes have differential effects on human pattern recognition. Specifically, automating information acquisition improved performance when it displayed information in a way that highlighted perceptual cues favorable to intuitive cognition. Contributions to dual-process research include evidence that workspace design changes the task-type, which can encourage application of either the human's intuitive or analytic system, affecting the human's ability to successfully recognize patterns needed to reach higher levels of information fusion.

Recommendations for Action

The principle results of this investigation lay the groundwork for designing common workspaces to support human-machine teaming in future information fusion systems. Specifically, intelligence analysts interacting with these systems will be better able to support machine-fusion pattern detection, thus improving the system's overall ability to understand the

current situation and predict when threats are likely to occur. Knowledge of the processes that humans use to fuse information impacts the allocation of fusion tasks to humans verses machines, and how information should be presented to humans to help them achieve levels 2 and 3 fusion.

Dual-processing approaches to information fusion indicate which tasks should be allocated to humans or machines in a fusion system by informing which tasks should be automated and how information should be displayed to best aid the human reach higher levels of information fusion. Human-machine workspaces should be designed to aid the human's ability to recognize patterns in data, meaning the workspaces should induce intuitive cognition. Automating information acquisition should provide perceptual cues that are beneficial for and encourage intuitive cognition. If the display contains more symbolic cues, such as words and numbers, that are favorable to analytic cognition, then information fusion systems should focus more on automating information analysis or decision selection rather than information acquisition. In this case, displays should present information as retrieval cues for long-term memory and assist the viewer in mentally chunking information to decrease cognitive load on working memory (Patterson, 2012) to enhance conscious pattern recognition.

Using workspace design to facilitate the retrieval of patterns used by humans' intuitive processes from long-term memory should encourage faster human information fusion, allowing more time for analytic processes to perform the task at hand, i.e., making a decision or increasing situation awareness. Previous work has found that with increasing information, the amount of time it takes to fuse information and make a decision systematically decreases as long as the additional information increases the coherence in the available information (Glöckner & Betsch, 2008b). Taking these results into consideration, coherent information should be

displayed together to facilitate the human's ability to use intuitive processes for high level information fusion.

Recommendations for Future Research

There are many potential directions for future research regarding the application of dual-processing models to information fusion. This research presented evidence that trying to fuse information using analytic processing degraded pattern recognition. A follow-up question concerns how using workspace design to trigger intuitive cognition affects other cognitive dimensions important for information fusion. For example, does using the intuitive system for information fusion impact factors such as situation awareness? To what extent is situation awareness dependent on the human's intuitive system or the analytic system?

Previous research, discussed in Chapter 2, indicates that intuitive cognition contains perceptual components. Theoretically it should also contain a procedural component (Patterson and Eggleston, 2017). Experiment 1 was designed to empirically establish that the intuitive system contains a procedural component, which was important for the initial hypotheses in Experiment 2. For Experiment 2, it was hypothesized that automating information acquisition would remove the procedural component of the task, which would yield worse pattern recognition in the case where the task was designed to engage intuitive cognition. This pattern of results was not found. It is difficult to determine if the reason is because the intuitive system relies so strongly on perceptual cues that removing the procedural component did not affect performance as predicted, or if the intuitive system contains a procedural component. Unfortunately, the foils grammar which was applied in Experiment 1 appeared to be too difficult distinguish from the training grammar, resulting in no changes in performance for any condition.

Experiment 1 should be re-run using the updated foils grammar that was used in Experiment 2 to fully address the extent to which intuitive cognition benefits from the procedural component.

For this research, the information people were fusing came from different windows, however all of the information was of the same type, i.e., simple coordinates of locations. However, multisource analysts that benefit from information fusion systems make use of multiple different types and formats of intelligence information. Replicating these results to see how automating information acquisition in a multi-INT environment influences how people fuse different types of information is a critical next step for the design of more complex information fusion systems.

For people who had the perceptual workspace, as their preference for and reliance on intuitive cognition decreased, their pattern recognition performance increased. The perceptual workspace itself was designed to encourage intuitive cognition. These results indicate that whether people preferred to rely on intuitive cognition or not, their performance was still enhanced by triggering that system. Future research is needed to investigate whether training programs that show people the benefit of relying on intuitive cognition could enhance performance on these types of tasks where pattern recognition may be important.

Summary

In a human-machine team, the human's ability to use intuition instead of rational thought, which a computer cannot do, brings a team strength that should not be forgotten in the drive to automate more and more tasks. Understanding how automation and workspace design affects the human's intuitive processes is a critical step in the design of effective information fusion systems. The present results indicate that if tasks are inherently favorable to the intuitive

system, workspaces should also be designed in such a way that triggers the human's intuitive system if pattern recognition is important. For workspaces that drive the human's analytic system, automating information acquisition will not improve pattern recognition. However if automating information acquisition provides perceptual cues that are favorable to the intuitive system, the human's ability to recognize patterns in data is improved, which ultimately leads to more effective high-level information fusion.

Appendix A: Instructions to Participants

Before the Experiment Instructions for Intuitive Condition:

For this experiment, your job is to track a person by accurately recording the route he takes each day. You will receive coordinates from two different sources and must integrate them into one product that shows the order of stops the person makes each day. You will record the routes by clicking on the coordinate on the map. For example, if you see "A1" appear in one of the chat windows, you will left click with your mouse on the map where it says A1, which in this example corresponds to the library. After you click on the map, a new coordinate corresponding to the second place the person stopped for the day will appear in one of the chat windows. You will then click on that coordinate on the map, and an arrow will be drawn between the two locations. The chat window with the most recent coordinate will turn red. The most recent coordinate is always the bottom one in the highlighted window. After you have recorded all of the stops for the day, you will click on the "submit" button at the bottom of the map. Accuracy is more important for this task than speed. We will go through a couple of examples together now.

Experimenter: Walk through the Intuitive Training with the participant. If the participant is still confused at the end of the training, restart the training and let them do it again.

Before the Experiment Instructions for Analytic Condition:

For this experiment, your job is to track a person by accurately recording the route he takes each day. You will receive coordinates from two different sources and must integrate them into one product that shows the order of stops the person makes each day. You will record the routes by typing in the name of the location found at the coordinate. For example, if you see "A1" appear in one of the chat windows, you will look at the map for coordinate A1 and see that in this example, A1 corresponds to the library. You will type "library" in the text box and hit enter. After you hit enter, a new coordinate corresponding to the second place the person stopped for the day will appear in one of the chat windows. You will then type the name of the corresponding location in the text box. The chat window with the most recent coordinate will turn red. The most recent coordinate is always the bottom one in the highlighted window. After you have recorded all of the stops for the day, you will click on the "submit" button at the bottom of the text box. Accuracy is more important for this task than speed. We will go through a couple of examples together now.

Experimenter: Walk through the Analytic Training with the participant. If the participant is still confused at the end of the training, restart the training and let them do it again.

Manual Instructions (To be read after the training) (AM and IM):

Now you are ready to begin. Your job is to make sure the coordinates are accurately recorded for each day. Do you have any questions?

Automated Instructions (To be read after the training) (AA and IA):

Now you are ready to begin. The computer will record the coordinates that appear in the chat windows for you. Your job is to make sure the coordinates are accurately recorded for each day. If you notice a mistake in the automation, please write down the day that the mistake occurred on this paper. Do you have any questions?

Before the Tests:

From here on out, the person's routes will be different than what you have seen before. Some of the routes will fit in with his overall regular pattern of activity and some will not. You will be asked at the end of each day if the person's pattern of movements ***seem*** consistent with the pattern of movements up to this point. If you feel that the person's movements throughout the day are consistent with his overall pattern of normal movements, then click on the "Yes" button. If you feel that the movements are inconsistent with his normal pattern of movements, respond by clicking "No". If you have any questions, please ask the experimenter before proceeding.

Test Question:

Did the person's route seem consistent with his normal pattern of movements?

Appendix B: Rational-Experiential Inventory-40

Rational-Experiential Inventory

Please use the following scale to answer these questions.

completely false				completely true
1	2	3	4	5

1. I have a logical mind.
2. _____ I prefer complex problems to simple problems.
3. _____ I believe in trusting my hunches.
4. _____ I am not a very analytical thinker.
5. _____ I trust my initial feelings about people.

6. _____ I try to avoid situations that require thinking in depth about something.
7. _____ I like to rely on my intuitive impressions.
8. _____ I don't reason well under pressure.
9. _____ I don't like situations in which I have to rely on intuition.
10. _____ Thinking hard and for a long time about something gives me little satisfaction.

11. _____ Intuition can be a very useful way to solve problems.
12. _____ I would not want to depend on anyone who described himself or herself as intuitive.
13. _____ I am much better at figuring things out logically than most people.
14. _____ I usually have clear, explainable reasons for my decisions.
15. _____ I don't think it is a good idea to rely on one's intuition for important decisions.

16. _____ Thinking is not my idea of an enjoyable activity.
17. _____ I have no problem thinking things through carefully.
18. _____ When it comes to trusting people, I can usually rely on my gut feelings.
19. _____ I can usually feel when a person is right or wrong, even if I can't explain how I know.
20. _____ Learning new ways to think would be very appealing to me.

21. _____ I hardly ever go wrong when I listen to my deepest gut feelings to find an answer.
22. _____ I think it is foolish to make important decisions based on feelings.
23. _____ I tend to use my heart as a guide for my actions.
24. _____ I often go by my instincts when deciding on a course of action.
25. _____ I'm not that good at figuring out complicated problems.

26. _____ I enjoy intellectual challenges.
27. _____ Reasoning things out carefully is not one of my strong points.
28. _____ I enjoy thinking in abstract terms.
29. _____ I generally don't depend on my feelings to help me make decisions.
30. _____ Using logic usually works well for me in figuring out problems in my life.
31. _____ I think there are times when one should rely on one's intuition.
32. _____ I don't like to have to do a lot of thinking.
33. _____ Knowing the answer without having to understand the reasoning behind it is good enough for me.
34. _____ Using my gut feelings usually works well for me in figuring out problems in my life.
35. _____ I don't have a very good sense of intuition.

36. _____ If I were to rely on my gut feelings, I would often make mistakes.
37. _____ I suspect my hunches are inaccurate as often as they are accurate.
38. _____ My snap judgements are probably mot as good as most people's.
39. _____ I am not very good at solving problems that require careful logical analysis.
40. _____ I enjoy solving problems that require hard thinking.

Data scheme
Recode: 4, 6, 8, 9, 10, 12, 15, 16, 22, 25, 27, 29, 32, 33, 35, 36, 37, 38, 39

Rational Ability:=(1 + 4 + 8 + 13 + 14 + 17 + 25 + 27 + 30 + 39)/10
Rational Engagement:=(2 + 6 + 10 + 16 + 20 + 26 + 28 + 32 + 33 + 40)/10
Experiential Ability:=(3 + 5 + 18 + 19 + 21 + 34 + 35 + 36 + 37 + 38)/10
Experiential Engagement:=(7 + 9 + 11 + 12 + 15 + 22 + 23 + 24 + 29 + 31)/10
31.

Appendix C: Demographic Questionnaire

Demographic Questionnaire

Date: _____
Research ID Number:_____

Please answer each question as <u>accurately</u> and <u>thoroughly</u> as you can and provide responses for all questions, responding with zeros or not applicable (N/A) when appropriate.

<u>General Information:</u>
Active Duty Air Force (circle one): YES NO
Age: _____
Gender (circle one): MALE FEMALE
Years Military Service: _____

<u>Training (check appropriate boxes):</u>
□ Basic Military Training (BMT)
□ Analyst Boot Camp (ATIC)
□ Geospatial Intelligence Training
□ Air Force DGS FTU Training
□ Initial Qualification Training
□ Continuation Training/Ready Intelligence Program (CT/RIP)
□ Requalification
□ FMV Exploitation Training
□ Other
Training Courses: _____

<u>Experience (check appropriate boxes):</u>
□ Air Force DCGS/DCGS-A
□ NASIC
□ Army Intelligence Brigade
□ NGA Imagery Exploitation
□ MQ-1/9 Sensor Operator
□ Real-time FMV experience in DGS/NASIC/NGA

Bibliography

ACC A5/2D (2021). *Air Force Distributed Common Ground System (AF DCGS) Artificial Intelligence, Automation, and Augmentation (AAA) Blueprint for action.*

Allen, R., & Reber, A.S. (1980). Very long term memory for tacit knowledge. *Cognition, 8*, 175-185.

Baddeley, A. (1998). *Human memory: Theory and practice.* Needham Heights, MA: Allyn & Bacon.

Betsch, T., & Glöckner, A. (2010). Intuition in judgment and decision making: Extensive thinking without effort. *Psychological Inquiry, 21*, 279-294.

Betsch, T., Plessner, H., Schwieren, C., & Gütig, R. (2001). I like it but I don't know why: A value-account approach to implicit attitude formation. *Personality and Social Psychology Bulletin, 27*, 242-243.

Blasch, E. (2006). Sensor, user, mission (SUM) resource management and their interaction with level 2/3 fusion. 9th *International Conference on Information Fusion,* 1-4.

Blasch, E.P., Rogers, S.K., Holloway, H., Tierno, J., Jones, E.K., & Hammoud, R.I. (2014). QuEST for information fusion in multimedia reports. *International Journal of Monitoring and Surveillance Technologies Research, 2(3)*, 1-30.

Blasch, E., Kadar, I., Salerno, J., Kokar, M.M., Das, S., Powell, G.M., Corkill, D.D., Ruspini, E.H. (2006). Issues and challenges in situation assessment (Level 2 fusion). *Journal of Advances in Information Fusion (1) No. 2,* 122-139

Blasch, E.P., Lambert, D.A., Valin, P., Kokar, M.M., Llinas, J., Das, S., Chong, C., &

Shahbazian, E. (2012). High level information fusion (HLIF): Survey of models, issues, and grand challenges. *IEEE A&E Systems Magazine*, 4-20.

Blasch, E.P., Plano, S. (2003). Level 5: User refinement to aid the fusion process. *Multisensor, Multisource, Information Fusion: Architectures, Algorithms, and Applications 2003, Proc of the SPIE,* Vol 5099.

Blasch, E., Steinberg, A., Das, S., Llinas, J., Chong, C., Kessler, O., Waltz, E., & White, F. (2013). Revisiting the JDL model for information exploitation. In Proceedings *16th International Conference of Information Fusion*, 9-12 July, 2013, Istanbul, Turkey, 129-136.

Boström, H., Andler, S.F., Brohede, M., Johansson, R., Karlsson, A., van Laere, J., Niklasson, L., Nilsson, M., Persson, A., & Ziemke, T. (2007). On the definition of information fusion as a field of research. *IKI Technical Reports, HS- IKI -TR-07-006.*

Cleeremans, A., Destrebecqz, A., & Boyer, M. (1998). Implicit learning: News from the front. *Trends in Cognitive Sciences, 2(10),* 406-416.

Davis, P.K., Perry, W.L., Hollywood, J.S., & Manheim, D. (2016). *Uncertainty-sensitive heterogeneous information fusion: Assessing threat with soft, uncertain, and conflicting evidence.* Retrieved from http://broadcaster.rand.org/t?ctl=5D72:83C2DB28E8BB756CA0AFCBC044D2704A&

Dennis, N.A., Howard Jr., J.H., &Howard, D.V. (2006). Implicit sequence learning

without motor sequencing in young and old adults. *Experimental Brain Research, 175,* 153–164.

Elm, W. C., Cook, M. J., Greitzer, F. L., Hoffman, R. R., Moon, B., & Hutchins, S. G. (2004). Designing support for intelligence analysts. In *Proceedings of the Human Factors and Ergonomics Society Annual Meeting* (Vol. 48, No. 3, pp. 406-410). SAGE Publications.

Evans, J.S.B.T. (2008). Dual-processing accounts of reasoning, judgment and social cognition. *Annual Review of Psychology, 59*, 255-278.

Evans, J.S.B.T., & Stanovich, K.E. (2013). Dual-process theories of higher cognition: Advancing the debate. *Perspectives on Psychological Science, 8(3)*, 223-241.

Gergle, D., Kraut, R.E., & Fussel, S.R. (2013). Using visual information for grounding and awareness in collaborative tasks. *Human Computer Interaction, 28*, 1-39.

Glöckner, A., & Betsch, T. (2008a). Modeling option and strategy choices with connectionist networks: Towards an integrated model of automatic and deliberate decision making. *Judgment and Decision Making, 3(3)*, 215-228.

Glöckner, A., & Betsch, T. (2008b). Multiple-reason decision making based on automatic processing. *Journal of Experimental Psychology: Learning, Memory, and Cognition, 34(5)*, 1055-1075.

Hall, M.J., Hall, S.A., & Tate, T. (2001). Removing the HCI bottleneck: How the human

computer interface (HCI) affects the performance of human centered fusion. In D. Hall & J. Llinas (Eds.), Handbook of Multisensor Data Fusion (pp. 19-1 – 19-11). CRC Press.

Hall, C.M., McMullen, S.A.H., Hall, D.L., McMullen, M.J., & Pursel, B.K. (2008). Perspectives on visualization and virtual world technologies for multi-sensor data fusion. In Proceedings of the 11th International Conference on Information Fusion, 30 June-3 July, Cologne, Germany.

Hall, D.L., McNeese, M.D., Hellar, D.B., Panulla, B.J., Shumaker, W. (2009). A cyber infrastructure for evaluating the performance of human centered fusion. In Proceedings of the International Conference on Information Fusion, 6-9 July 2009, Seattle, Washington, 1257-1264.

Hall, D.L., McNeese, M., Llinas, J., & Mullen, T. (2008). A framework for dynamic hard/soft fusion. In *Proceedings of the 11th International Conference on Information Fusion* (pp. 1-8). Cologne, Germany: IEEE.

Hammond, K.R., Hamm, R.H., Grassia, J., & Pearson, T. (1987). Direct comparison of the efficacy of intuitive and analytical cognition in expert judgment. *IEEE Transactions on Systems, Man, and Cybernetics, 17(5)*, 753-770.

Hancock, P.A., Jagacinski, R.J., Parasuraman, R., Wickens, C.D., Wilson, G.F., & Kaber, D.B. (2013). Human-automation research: Past, present, and future. *Ergonomics in Design: The Quarterly of Human Factors Applications, 21 (9)*, 9-14.

Hayes, N. A., & Broadbent, D. E. (1988). Two modes of learning for interactive tasks.

Cognition, 28, 249–276.

Hélie, S., & Sun, R. (2010). Incubation, insight, and creative problem solving: A unified theory and connectionist model. *Psychological Review, 117(3)*, 994-1024.

Inagaki, T. (2014). Human-machine coagency for collaborative control. In Sankai, Y., Suzuki, K., Hasegawa, Y. (eds), Cybernetics: Fusion of human, machine and Information Systems, (pp. 235-265), Japan: Springer, 2014.

Jenkins, M.P., Gross, G.A., Bisantz, A.M., & Nagi, R. (2015). Towards context aware data fusion: Modeling and integration of situationally qualified human observations to manage uncertainty in a hard + soft fusion process. *Information Fusion, 21*, 130-144.

Jipp, M. (2016). Expertise development with different types of automation: A function of different cognitive abilities. *Human Factors, 58 (1)*, 92-106.

Kaber, D.B., Perry, C.M., Segall, N., McClernon, C.K., & Prinzel III, L.J. (2006). Situation awareness implications of adaptive automation for information processing in an air traffic control-related task. *International Journal of Industrial Ergonomics, 36*, 447-462.

Kaber, D.B., Wright, M.C., Prinzel III, L.J., & Clamann, M.P. (2005). Adaptive automation of human-machine system information-processing functions. *Human Factors, 47 (4)*, 730-741.

Kahneman, D. & Klein, G. (2009). Conditions for intuitive expertise: A failure to disagree. *American Psychologist*, *64*, 515-526.

Khaleghi, B., Khamis, A., Karray, F., & Razavi, S. (2013). Multisensor data fusion: A

review of the state-of-the-art, *Information Fusion, 14*, 28-44.

Kiesel, A., Kunde, W., Pohl, C., Berner, M. P., & Hoffman, J. (2009). Playing chess unconsciously. J*ournal of Experimental Psychology: Learning, Memory, and Cognition, 35(1)*, 292-298.

Kiyokawa, S., Dienes, Z., Tanaka, D., Yamada, A., & Crowe, L. (2012). Cross cultural differences in unconscious knowledge. *Cognition, 124*, 16-24.

Knowlton, B.J., & Squire, L.R. (1996). Artificial grammar learning depends on implicit acquisition of both abstract and exemplar-specific information. *Journal of Experimental Psychology: Learning, Memory, and Cognition, 22 (1),* 169-181.

Kokar, M.M., & Ng, G.W. (2009). Guest Editorial: High-level information fusion and situation awareness*. Information Fusion, 10*, 2-5.

Kokar, M.M., Tomasik, J.A., & Weyman, J. (2003). Formalizing classes of information fusion systems. *Information Fusion, 5,* 189-202.

Linderman, M.H., Chase, G., Boury-Brisset, A., Nevitt, J., Henley, J., Read, R., Russel, S., & Hyden, P. (2012). The Role of Information Management to support high-level fusion. In E. Blasch, E. Bossé, & D. Lambert (Eds.), *High-Level Information Fusion Management and Design.* Boston, MA: Artech House.

Maier, N. R. F. (1931). Reasoning in humans: II. The solution of a problem and its appearance in consciousness. *Journal of Comparative Psychology, 12(2)*, 181-194.

NCSS 2021 Statistical Software (2021). NCSS, LLC. Kaysville, Utah, USA,

ncss.com/software/ncss.

Nissen, M.J. & Bullemer, P. (1987). Attentional requirements of learning: Evidence from performance measures. *Cognitive Psychology, 19*, 1-32.

Onnasch, L., Wickens, C.D., Li, H., & Manzey, D. (2013). Human performance consequences of stages and levels of automation: An integrated meta-analysis. *Human Factors, 56 (3)*, 476-488.

Parasuraman, R., Sheridan, T.B., & Wickens, C.D. (2000). A model for types and levels of human interaction with automation. *IEEE Transactions on Systems, Man, and Cybernetics – Part A: Systems and Humans, 30 (3)*, 286-297.

Parasuraman, R., & Wickens, C. (2008). Humans: Still vital after all these years of automation. *Human Factors, 50 (3)*, 511-520.

Patterson, R. E. (2012). Cognitive engineering, cognitive augmentation, and information display. *Journal of the Society for Information Display*, *20*(4), 208-213.

Patterson, R.E. (2017). Intuitive cognition and models of human-automation interaction. *Human Factors, 59(1)*, 101-115.

Patterson, R.E. and Eggleston, R.G. (2017). Intuitive Cognition. *Journal of Cognitive Engineering and Decision Making, 11(1)*, 5-22.

Patterson, R.E., Pierce, B.J., Boydstun, A.L., Ramsey, L.M., Shannan, J., Tripp, L., &

Bell, H. (2013). Training intuitive decision making in a simulated real-world environment. *Human Factors, 55(2)*, 333-345.

Pravia, M.A., Babko-Malaya, O., Schneider, M.K., White, J.V., Chong, C., Willsky, A.S. (2009). Lessons learned in the creation of a data set for hard/soft information fusion. In Proceedings of the International Conference on Information Fusion, 6-9 July 2009, Seattle, Washington, 2114 -2121.

Pravia, M.A., Prasanth, R.K., Arambel, P.O., Sidner, C., & Chong, C. (2008). Generation of a fundamental data set for hard/soft information fusion. In Proceedings of the 11th International Conference on Information Fusion (pp. 1-8). Cologne, Germany: IEEE

Reber, A.S. (1967). Implicit learning of artificial grammars. *Journal of Verbal Learning and Verbal Behavior (6)*, 855-863.

Reber, A.S., Kassin, S.M., Lewis, S., & Cantor, G. (1980). On the relationship between implicit and explicit modes in learning of a complex rule structure. *Journal of Experimental Psychology, 6(5)*, 492-502.

Remillard, G. (2017). Independent learning of spatial and nonspatial sequences. *Canadian Journal of Experimental Psychology, 71(4)*, 283-298.

Reverberi, C., Toraldo, A., D'Agostini, S., & Skrap, M. (2005). Better without (lateral)

frontal cortex? Insight problems solved by frontal patients. *Brain, 128,* 2882-2890.

Riveiro, M. (2007). Evaluation of uncertainty visualization techniques for information fusion. In *Proceedings of the 10th International Conference on Information Fusion* (pp. 1-8). Quebec, Canada: IEEE.

Reichenbach, J., Onnasch, L., & Manzey, D. (2011). Human performance consequences of automated decision aids in states of sleep loss. *Human Factors, 53 (6)*, 717-728.

Robertson, E.M. (2007). The serial reaction time task: Implicit motor skill learning? *The Journal of Neuroscience, 27(38),* 10073-10075.

Röttger, S., Bali, K., & Manzey, D. (2009). Impact of automated decision aids on performance, operator behaviour and workload in a simulated supervisory control task. *Ergonomics, 52(5),* 512-523.

Roy, J., Lambert, D., White, F., Karakowski, J., Salerno, J., Hinman, M. (2007). Data- and information- fusion Models. In Bosśe, E., Roy, J., Wark, S. (eds). *Concepts, Models, and Tools for Information Fusion*. Artech House, Inc: Norwood, MA, 69 – 117.

Sarter, N.B., & Schroeder, B. (2001). Supporting decision making and action selection

under time pressure and uncertainty: The case of in-flight icing. *Human Factors, 43(4)*, 573-583.

Sauer, J., & Rüttinger, B. (2007). Automation and decision support in interactive consumer products. *Ergonomics, 50(6)*, 902-919.

Scott, K. G. (1967). Clustering with perceptual and symbolic stimuli in free recall. *Journal of Verbal Learning and Verbal Behavior, 6,* 864-866.

Sethumadhavan, A. (2009). Effects of automation on air traffic controller situation awareness and performance. *Proceedings of the Human Factors and Ergonomics Society 53rd Annual Meeting*, 1-5.

Stensson, P., & Jansson, A. (2014). Autonomous technology – sources of confusion: A model for explanation and prediction of conceptual shifts. *Ergonomics, 57 (3)*, 455-470.

Turner, K.L., & Miller, M.E. (2017). The effect of automation and workspace design on humans' ability to recognize patterns while fusing information. *IEEE Conference on Cognitive and Computational Aspects of Situation Management*, Savannah, Georgia, March 27-31, 2017.

Van den Bos, E. & Poletiek, F.H. (2010). Structural selection in implicit learning of artificial grammars. *Psychological Research, 74*, 138-151.

Van Den Bos, E., & Poletiek, F.H. (2008). Effects of grammar complexity on artificial grammar learning. *Memory & Cognition, 36(6)*, 1122-1131.

Wagemans, J., Elder, J.H., Kubovy, M., Palmer, S.E., Peterson, M.A., Singh, M., & von der Heydt, R. (2012). A century of Gestalt psychology in visual perception: I. Perceptual grouping and figure-ground organization. *Psychological Bulletin, 138(6)*, 1172-1217.

Wagemans, J., Feldman, J., Gepshtein, S., Kimchi, R., Pomerantz, J.R., van der Helm, P.A. & van Leeuwen, C. (2012). A century of gestalt psychology in visual perception II. Conceptual and theoretical foundations. *Psychological Bulletin, 138(6)*, 1218-1252.

Waltz, E. (2000). Data Fusion in offensive and defensive information operations. NSSDF Symposium.

Waltz, E. & Llinas, J. (1990). Multisensor Data Fusion, Artech House: Norwood, MA.

Wickramarathne, T.L. (2012). An analytical framework for soft and hard data fusion: A Dempster-Shafer belief theoretical approach. dtic.mil.

Wright, M.C. & Kaber, D.B. (2005). Effects of automation of information-processing functions on teamwork. *Human Factors, 47 (1)*, 50-66.

Wright, R.L, & Whittlesea, B.W.A. (1998). Implicit learning of complex structures:

Active adaptation and selective processing in acquisition and application. *Memory and Cognition, 26(2)*, 402-420.